VOLVO PENTA

SERVICE AND MAINTENANCE 11L INDUSTRY

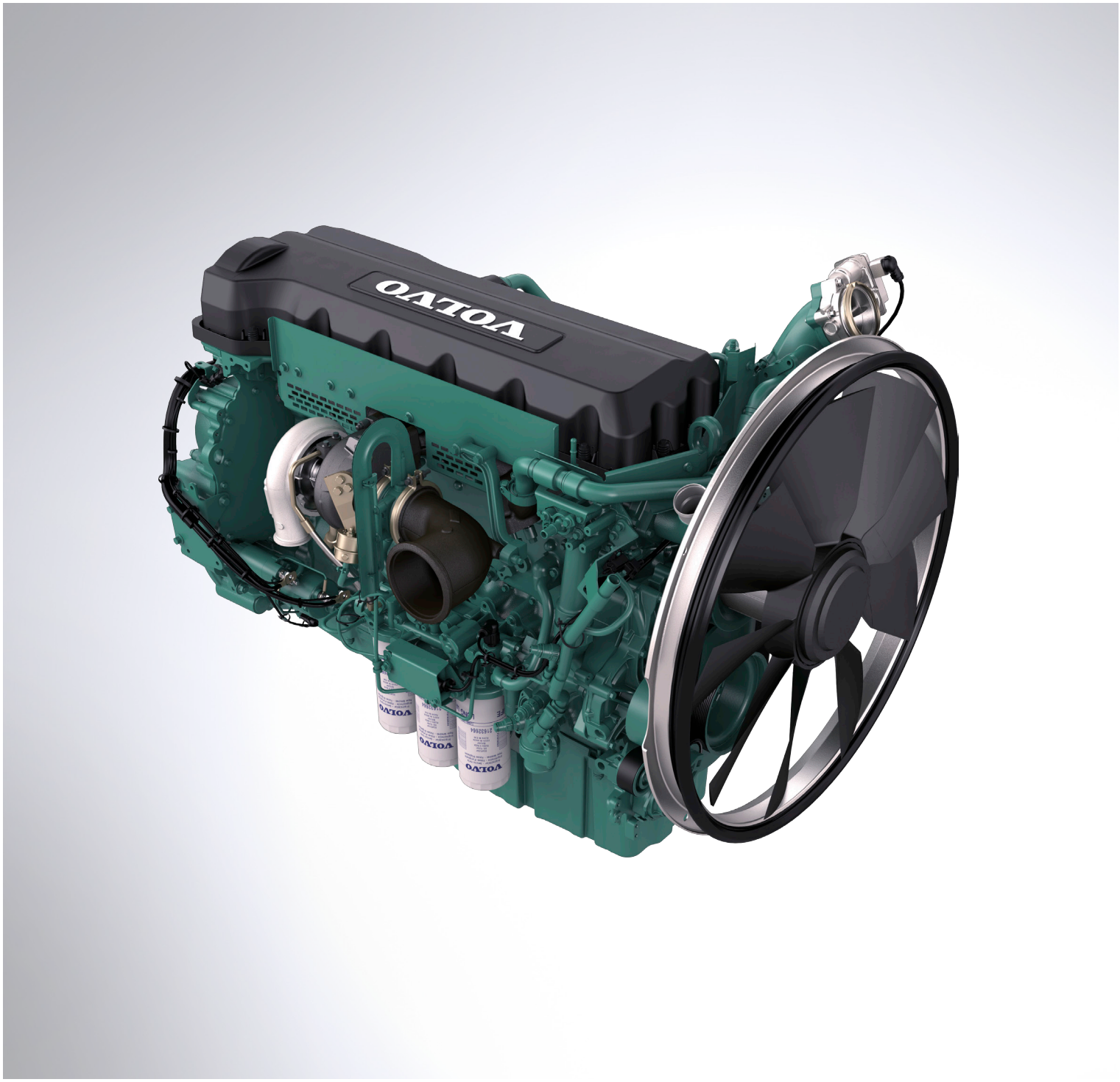

© 2017 AB VOLVO PENTA
Volvo Penta reserves the right to make changes
Printed on environmentally friendly paper

Table of Content

Safety Information 2
Lifting the engine – never do so alone 8
Proper lifting equipment 9
General Information 10
Illustrations 13
Chemical products 16
Chemical products 16
Specifications 17
Engine Decals 17
General Tightening Torques 18
Specifications 19
Engine 21
Maintenance Schedule 21
General inspection 21
Component location 22
General advice for electronic protection 24
Air Filter 25
Valves, Adjustment 26
Lubrication System 27
When you work with Chemicals, Fuel and Lubrication Oil, Change 27
Engine oil, change 27
Oil filter, Change 29
Oil Analysis 32
Fuel System 33
General 33
Fuel Pre-filter, Change 34
Fuel filter, Change 39
Fuel system, bleeding 41
Exhaust System 44
Turbocharger, Inspection 44
Charge Air Pipe, Leakage Check 45
EGR cooler 46
SCR System 47
Cooling System 51
Coolant Level, Checking and Topping Up 51
Coolant Filter, Change 54
Cooling Package, Disassembly 55
Drive Belt, Change 60
Long Term Storage 64
Checklist 66
Battery, Maintenance 67
Index 69

Safety Information

This chapter describes how safety precautions are presented in the manual and on the product. Read the chapter through very carefully before you start the engine or do any maintenance or service. It has to do with your safety; an incorrect operation can lead to personal injury and damage to products or property. It also gives you an introduction to the basic safety rules for using and looking after the engine.

If anything remains unclear or if you are unsure of something, contact your Volvo Penta dealer for assistance.

IMPORTANT:
Always follow local safety instructions and regulations.

Safety texts have the following order of priority:

⚠ DANGER!
Indicates a hazardous situation, which, if not avoided, will result in death or serious injury.

⚠ WARNING!
Indicates a hazardous situation, which, if not avoided, could result in death or serious personal injury.

⚠ CAUTION!
Indicates a hazardous situation, which, if not avoided, could result in minor or moderate personal injury.

IMPORTANT:
Indicates a situation, which, if not avoided, could result in property damage.

NOTICE! Used to draw attention to important information that will facilitate work or operations.

⚠
This symbol is may be used on the product to call your attention to the fact that this is safety information. Always read such information very carefully.

Make sure that warning and information symbols on the engine are clearly visible and legible. Replace symbols that have been damaged or have been painted over.

📖
In some cases, this symbol is used on our products and refers to important information in the Operator's Manual.

47709866 05-2017 © AB VOLVO PENTA

Most chemicals such as engine and transmission oils, glycol, petrol and diesel oil and chemicals used in workshops such as degreasing agents, paint and solvents are harmful to health.

Carefully read the instructions on the product packaging! Always follow the safety regulations, such as the use of protective masks, goggles, gloves, etc. Make sure that other personnel are not exposed to substances that are hazardous to health. Ensure good ventilation.

Manage used and leftover chemicals in the prescribed manner.

Personal safety equipment

P0024482

⚠ CAUTION!
Always use appropriate safety equipment. Personal protective equipment does not eliminate the risk of injury but it will reduce the degree of injury if an accident does happen.

Some examples are ear protection, eye and face protection, protective footwear, personal protective equipment, head protection, protective clothing, gloves and respirators.

⚠ WARNING!
Ensure that all machine guards and safety devices are in place and are functional.

⚠ CAUTION!
Never use tools or products that show signs of damage.

Protect your eyes

⚠ CAUTION!
Wear safety glasses.

Always wear safety glasses if there is a risk of splintering, sparks and spray from the electrolyte (so-called battery acid), or other chemicals. Your eyes are very delicate and damage can result in loss of sight!

Protect your skin

⚠ CAUTION!
Risk of skin damage.

Avoid getting oil on your skin! Prolonged or repeated exposure to oil can dry out the skin. Thereafter, irritation, dryness and eczema and other skin problems may occur.

Use protective gloves and avoid oil-soaked clothes and rags. Wash regularly, especially before eating. Wear suitable protective creams to prevent skin from drying out and to facilitate cleaning.

P0024470

Fire safety

⚠ WARNING!
Fire and Explosion Risk!
Accidental spark could ignite fuel vapors.

All fuels – as well as many lubricants and chemicals – are flammable. Do not allow open flames or sparks near them. **Smoking forbidden!** Hydrogen from the batteries is also very flammable and explosive in certain mixture with air.

Ensure that the workplace is well ventilated and take the necessary precautions before welding or grinding begins. Always ensure that there is a fire extinguisher close at hand in the work area.

Spare parts — safety

⚠ WARNING!
Always use spare parts with the same quality as genuine Volvo Penta parts to minimize the risk of an explosion or fire.

Components in fuel systems and electrical systems on Volvo Penta engines are designed and manufactured to minimize the risk of explosions and fire, in accordance with applicable legal requirements.

Used oils, filters and chemicals etc.

⚠ WARNING!
Risk of fire.
Store fuel soaked rags and other flammable material so that there is no danger of them catching fire.

Oil-soaked rags can spontaneously ignite under certain circumstances.

IMPORTANT:
Used fuel and oil filters are environmentally hazardous waste and must be taken to an approved waste management facility for correct handling, as must any used lubricating oil, contaminated fuel, paint residue, solvents, degreasers and wash residue.

Prevent start of the engine

⚠ WARNING!
Immobilize the engine by turning off the power supply with the main switch(es) and lock it (them) in the off position before starting work. Place a warning notice at the main switch.
If the engine is equipped with BMS (Battery Management System), always disconnect both battery cables from the battery terminals.

47709866 05-2017 © AB VOLVO PENTA

P0024481

Ventilation when running the engine

WARNING!

Only start the engine in a well-ventilated area. If operating the engine in a closed area ensure that there is exhaust ventilation leading out of the work area to remove exhaust gases and crankcase ventilation emissions.

The engine must not be operated in areas where there are explosive materials or stored gas.

P0024808

Rotating parts and hot surfaces

DANGER!

Working with or approaching a running engine is a safety risk. Watch out for rotating components and hot surfaces.
If the engine is in operation and operates another device, you must not, under any circumstances, staying close to the engine.

It is a rule that no work should be performed on a running engine. However, there is some adjustment work requiring the engine to run. It is a security risk to come near a running engine. Loose clothing or long hair can get caught in rotating parts, careless movements or a dropped tool can result in serious injury.

Be careful to avoid hot surfaces (exhausts, turbochargers, manifolds for the charge air and starter elements etc.) and hot liquids in pipes and hoses on engines running or has just been turned off. Refit all guards removed during service operations before starting the engine.

Information on the engine

IMPORTANT:

Make sure that all warning and information decals on the product are always visible. Replace decals which have been damaged or painted over.

P0024483

Prohibition on use of start spray

⚠ WARNING!
Never use start spray or similar agents to start an engine. This may cause an explosion in the inlet manifold. Risk of personal injury.

P0024688

Before start of engine

⚠ WARNING!
Never start the engine if there is reason to suspect fuel and/or gas leaks, or if there is explosive material nearby.

IMPORTANT:
Only start the engine with the air filter and protective caps fitted. Foreign objects in the inlet line could cause machine damage. Also make sure that no tools or other parts have been left next to the engine.

⚠ WARNING!
Never start the engine with the valve cover removed. There is a risk of personal injury.
For engines with turbochargers, the rotating compressor turbine can in addition cause serious personal injuries.

Before any work on the electrical system

⚠ WARNING!
Always stop the engine first. Then disconnect the current at the main switches and any external power supply before working on the electrical system – to minimize the risk of electrical hazards.

IMPORTANT:
Never disconnect the current using the main switches when the engine is running or by disconnecting the battery cables.
The alternator and electronics could be damaged.

Avoid damage to the engine control module and other electronics

IMPORTANT:
Switch off the main switch before connecting or disconnecting a connector.

Before any work on the cooling system

⚠ WARNING!
Stop the engine and let it cool before starting work on the cooling system. Hot fluids and hot surfaces can cause burns.

47709866 05-2017 © AB VOLVO PENTA

Hot coolant under pressure

⚠ CAUTION!
Hot coolant can cause burns. Avoid opening the filler cap for the coolant when the engine is still hot. Steam or hot coolant can spray out and system pressure is lost.

Open the filler cap slowly and release the pressure in the cooling system if the filler cap or valve must be opened – or if a plug or a coolant hose must be removed from a hot engine.

Hot oil under pressure

⚠ CAUTION!
Hot oil can cause burns. Avoid getting hot oil on the skin. Ensure that the lubrication system is not pressurized before starting any work. Never start or operate the engine without the oil filler cap is on. There is a risk that hot oil can spray out.

At any leak detection on the fuel system

P0024488

⚠ WARNING!
Wear safety goggles!
Be extremely careful when searching for leaks in the fuel system high-pressure circuits. There is very high pressure in the jet from pipes and injectors. The fuel may penetrate the tissue and cause serious risk of blood infection (septicemia).

Handling of fuel pipes

IMPORTANT:
High pressure pipes for fuel must not be bent or straightened under any circumstances. Cracks may occur. Damaged pipes must be replaced.

Before any work on the fuel system — Cleanliness

IMPORTANT:
Take great care to keep the fuel system components clean. Even minimal amounts of dirt can cause engine breakdown.

Safe handling of batteries

⚠ WARNING!
Risk of fire and explosion. Never allow an open flame or electric sparks near the battery or batteries.

A spark caused by an incorrectly connected battery can be enough for the battery to explode with serious injuries.

Do not touch the connections during start attempts. Sparking hazard! Do not lean over batteries.

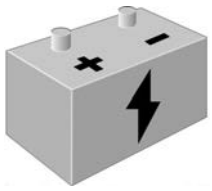

P0024468

Correct polarity of the batteries

IMPORTANT:
Make sure that the positive (+) and negative (–) battery cables are correctly connected to the corresponding battery terminals. Wrong connection may cause severe damage to electrical equipment.

Risks of electrolyte in batteries

⚠ WARNING!
Always wear protective goggles when charging or handling batteries.
Battery electrolyte is highly corrosive.

Rinse immediately with copious amounts of water if the electrolyte gets in your eyes. Search directly after the rinsing help by medical staff.

If it comes electrolyte to unprotected skin, wash immediately with soap and water.

After finished work with the engine

IMPORTANT:
Always perform a leakage and function check.

Cleaning the engine and components

P0024486

IMPORTANT:
Never use a high pressure washer for cleaning of engine or engine components.

Cleanliness for sensitive components

IMPORTANT:
Observe meticulous cleanliness when handling system components.
Even minimal amounts of dirt could cause a breakdown.

Lifting the engine – never do so alone

P0024485

⚠ WARNING!
Never work alone when removing heavy components, even when using lifting devices such as locking tackle lifts.

47709866 05-2017 © AB VOLVO PENTA

IMPORTANT:
When using a lifting device, two people are usually required to do the work – one to take care of the lifting device – and the other to ensure that components are lifted clear and not damaged during the lifting operations.

Proper lifting equipment

⚠ DANGER!
The existing lugs on the engine should be used for lifting. **Always check that the lifting equipment used is in good condition and has the load capacity to lift the engine** (engine weight including transmission and extra equipment). For safe handling and to avoid damaging components fitted to the top of the engine, the engine must be lifted with a correctly adjusted lifting boom.
Never perform any work on an engine that is only suspended from the lifting equipment.

IMPORTANT:
All chains or wires must run parallel to each other and as perpendicular to the engine as possible. If other equipment attached to the engine has altered its center of gravity, special lifting devices may be needed to obtain the correct balance for safe handling.

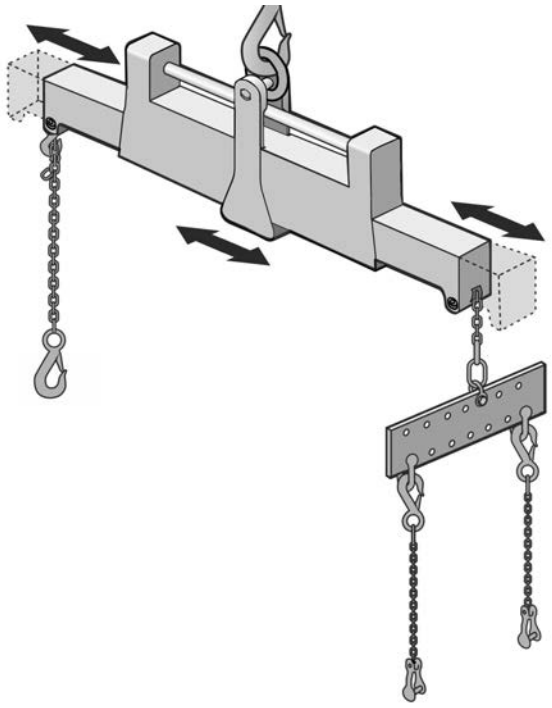

P0024689
Example of an adjustable lifting yoke and a lifting tool.

General Information

General Information

This Service and Maintenance Manual contains descriptions and servicing instructions for the above-mentioned standard model Volvo Penta products. The design and servicing items may vary between different products. The applicable service intervals and servicing procedures are described in the Maintenance Schedule for the product.

The product designation, serial number and specification are indicated on the engine decals or type plate. This information must always be included in all correspondence regarding the product.

The Manual is produced primarily for the use of Volvo Penta's service workshops. It is assumed that any person using the Service Manual has a fundamental knowledge of the product and is able to carry out mechanical and electrical work to trade standard.

Volvo Penta continually develops its products. We therefore reserve the right to make changes.
All information in this Manual is based on product data that was available at the time the Manual was published.

NOTICE! The owner is responsible for ensuring that all scheduled maintenance is performed. Volvo Penta warranty claims can be refused if a failure to carry out maintenance results in a defect in the indicated product. Refer to the Warranty Terms that are supplied with the engine.

Specific terms for the U.S. market

This engine is certified as being in conformity with Federal and California emission control regulations. The emissions control parts are covered by the Emission Control System Warranty. Covered parts and conditions are listed under "What is covered by the Emission Warranty" in the "Emission Control System Warranty Statement". Repairs and service covered by the warranty will be performed by an authorized Volvo Penta distributor or dealer with no charge for parts or labor, including diagnosis, using Volvo Penta parts for any part of the emission control system covered by the warranty and found defective.

Use of a service or repair facility that is not a Volvo Penta authorized distributor or dealer, or use of non-Volvo Penta emission-related components, will not void or limit coverage of the Emission Control System Warranty. If emission related components/items are included in the scheduled service, then such parts are marked in the service protocol with a diamond (♦) and the service must be performed at prescribed time intervals for compliance with the Emission Control System Warranty. For the complete warranty conditions, see the "Emission Control System Warranty Statement".

47709866 05-2017 © AB VOLVO PENTA

Certified engines

The engine is emissions-certified, and if it is used in an area where exhaust emissions are regulated by law, this places special demands on the care and maintenance of the engine.

NOTICE! Neglect or failure to follow the items required here may invalidate the engine emissions certificate.
This means that AB Volvo Penta will no longer be able to assume liability for the engine specification being in accordance with the certified model. Volvo Penta is not responsible for damages or costs arising as a result of this.

- Certification means that an engine type has been inspected and approved by the relevant authority. The engine manufacturer guarantees that all engines made of the same type are equivalent to the certified engine.
- It is the responsibility of the operator/user to ensure that no intentional misuse of the engine takes place.
- Volvo Penta maintenance and service intervals must be followed.
- All malfunctions should be addressed as quickly as possible.
- We strongly recommend the use of genuine Volvo Penta parts or parts with the same quality as Volvo Penta parts.
- The engine must not be converted or modified in any way, except for the accessories and service kits which Volvo Penta has approved for the engine.
- No changes to the installation of the exhaust pipe and engine air inlet ducts may be made.
- No warranty seals (if present on the product) may be broken by unauthorized persons.

Maintenance Schedule

To maintain the product's functionality, the Maintenance Schedule must be followed. Some operations can be carried out by the owner or other person with sufficient technical competence, in accordance with the Maintenance Schedule. Please consult an authorized Volvo Penta dealer in the event of doubt regarding how service work should be performed. Servicing items are marked in the Schedule. The Service Protocol is available on the Volvo Penta website via the Product Center search function:
"Search Publications"

Genuine Volvo Penta parts

Volvo Penta products are designed and made to achieve the highest quality. All parts are made so that together they provide the best possible reliability. We therefore recommend that It is advisable to always use Volvo Penta original spare parts, which are manufactured to the same rigorous specifications as the factory-fitted parts comprising Volvo Penta drivelines.

Genuine Volvo Penta engine oil

Volvo Penta supplies a wide range of lubricants developed especially for Volvo Penta engines. VDS (Volvo Drain Specification) is a Volvo standard, specifying Volvo’s requirements concerning oil grade. For the engine's operation and long life, it is recommended to use the specified oil.

Genuine Volvo Penta coolant

The main function of a coolant is to absorb heat from the engine. The coolant also protects against freezing, lime deposits and corrosion. Volvo Penta Coolant VCS (yellow) and Volvo Penta Coolant (green) are two completely different types of coolant, which contain different types of inhibitor. Different types of coolants (colors) must not be mixed.

If you need to dilute concentrated coolant with water yourself, the chemical composition of the water may impair the corrosion protection. In areas with high levels of calcium and sodium in tap water the coolant must be diluted with distilled water. Alternatively, Volvo Penta coolant is available for purchase ready diluted.

NOTICE! It is important to use the 40–60 % concentration of coolant in the cooling system, even if there is no risk of freezing. The coolant also prevents corrosion and deposits. A mixture with a concentration above 60 % will impair frost protection.

47709866 05-2017 © AB VOLVO PENTA

Illustrations

Many illustrations contain standardized symbols and colors. Please refer to the following information, to avoid misunderstandings when using this manual to assist in working on an engine or transmission.

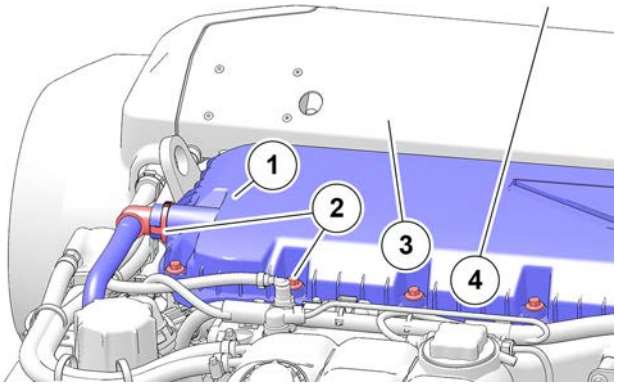

P0015699

Colors used in illustrations

Most illustrations include a highlighted component (blue) and that is secured by a (red) bolt or similar as part of a (light gray) engine or transmission.

1 Highlighted components (blue)

2 Fastener (red)

3 Assembly (light gray)

4 Background (white)

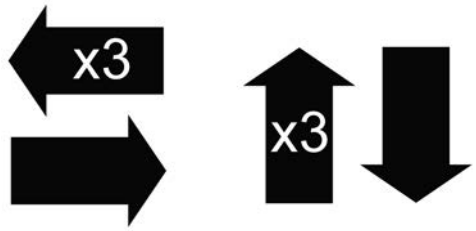

P0015623

Position

Arrows that point to items. Sometimes a number next to an arrow can, for example, indicate three screws. When this symbol is used on a number of bolts, the service technician is expected to tighten the bolts in that logical order.

NOTICE! If an arrow with the text“ x3“ points to only one item (e.g. a screw), this also applies to the two other items (the two remaining screws) that are indicated in the illustration.

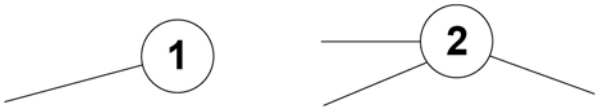

P0015627

This symbol indicates a location number for an item (e.g. 2), which is also specified in the associated textual information.

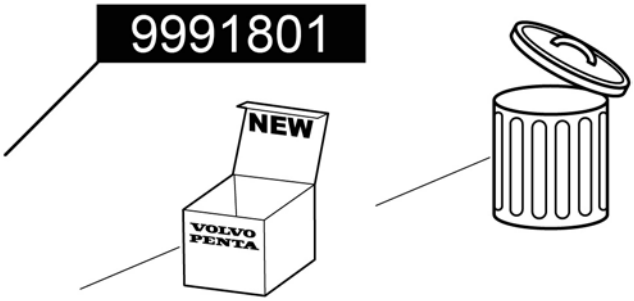

P0015628

The symbol to the left shows the part no. for the located special tool, e.g. 9991801.
The lower symbol is used when something needs to be replaced by a new part./kit.
The symbol to the right is used when an item must be scrapped.

Movement

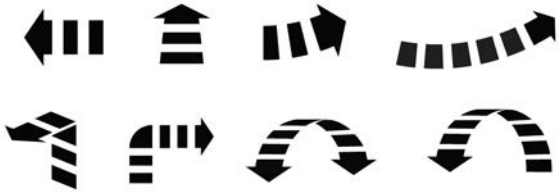

P0015622

Movement arrows are used to show in which direction a component to be moved or rotated.

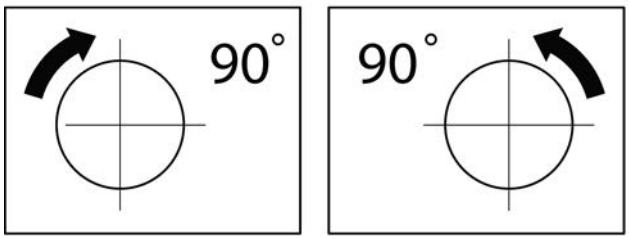

P0015625

This symbol is used in the corner of an illustration to show how many degrees the object must be turned, and in which direction.

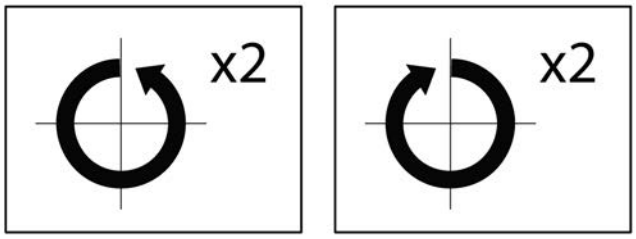

P0015626

This symbol is used to show how many turns the object must be rotated and in which direction.

Important

P0015005

An eye symbol is used when something needs close visual inspection or must be performed in a certain way.
The symbol at the right is used when several mechanics are needed.

Safety

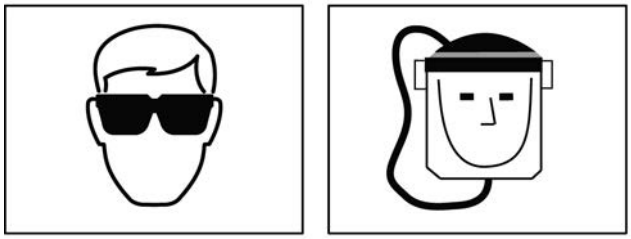

P0015697

These symbols are used when certain safety related equipment is required.

47709866 05-2017 © AB VOLVO PENTA

Chemicals

P0015695

Symbols can also indicate when and how a chemical product is to be used.

Cleanliness

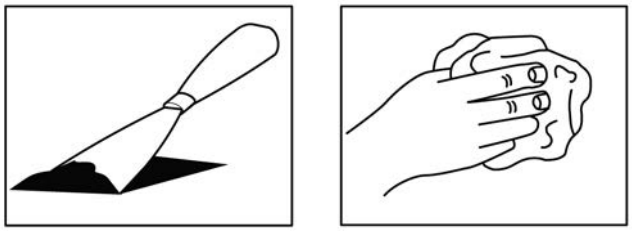

P0015624

A scraping symbol recommends that sealant residue, etc. should be scraped off a contact surface to clean it.
A symbol with a rag recommends that the mechanic cleans the contact surface thoroughly, or that a rag is used to protect against a possible spill of oil or other liquid.

Units

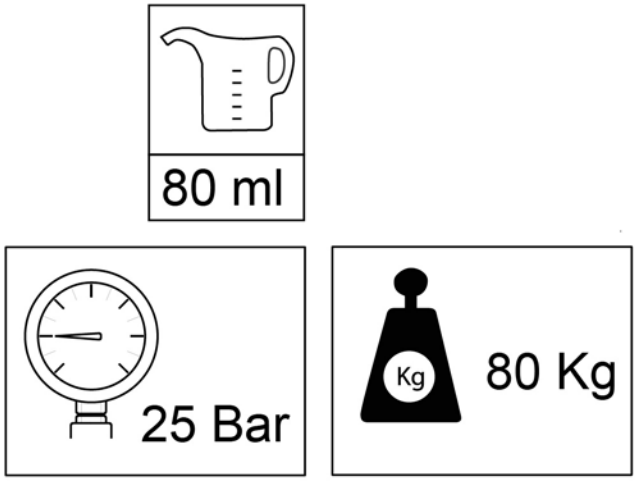

P0015696

Units are mentioned in the illustration when a specific value (e.g. pressure, weight, resistance, etc.) is expected.

Sealant

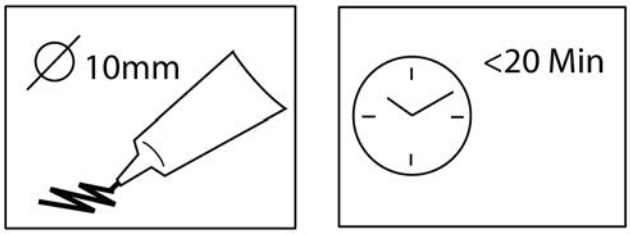

P0015698

A tube symbol indicates the thickness of a bead of sealant.
A clock symbol is used when something needs to be done within or after a certain time period.

Chemical products

Chemical products

The following is **a selection** of Volvo Penta recommended chemical products. Also refer under Specifications.

85145750 Thread locking

1161346 Corrosion protection

1161231 Sealant

P0022820

Engine oil VDS-4, 15W-40

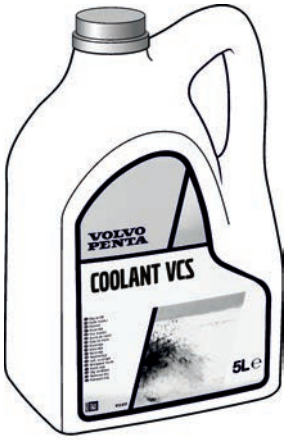

P0023031

VCS Coolant

P0022805

Grease
828250

47709866 05-2017 © AB VOLVO PENTA

Specifications

Engine Decals

There are type plates on the engine, and in the case of marine applications, also on the drivelines. Some of the type plates are marked with identity numbers. This information should always be used as a reference when ordering service and replacement parts or contacting Volvo Penta dealers.

ıere.

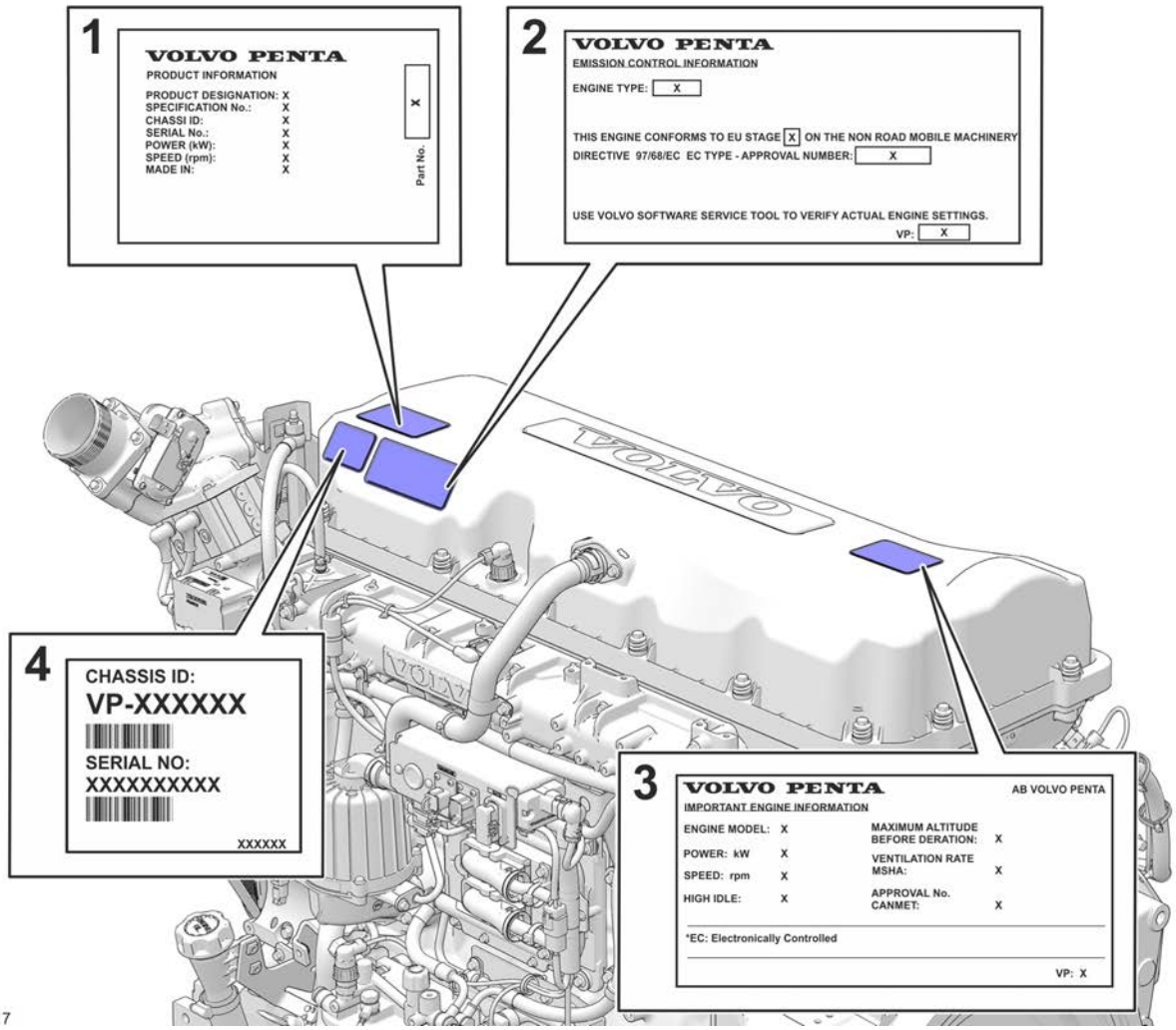

1 Product information
2 Emissions information
3 Engine information
4 CHASSIS ID

General Tightening Torques

Bolt	Nm (lbf. ft.)
M6 standard bolt	10 (7.4)
M8 standard bolt	24 (17.7)
M10 standard bolt	48 (35.4)
M12 standard bolt	85 (62.7)
M14 standard bolt	140 (103.3)
M16 standard bolt	220 (162)

NOTICE! Inspect bolts that will be re-installed. Damaged bolts with e.g. shear marks under the heads, must be scrapped.

47709866 05-2017 © AB VOLVO PENTA

Specifications

Volvo Penta products, all markets excluding North America

Oil quantity in engine, including filter. TAD1140VE - TAD1172VE	37 liters (9.77 US gallons)
Engine oil. Part number: 22305989 (1 liter) Engine oil. Part number: 22305990 (5 liters) Engine oil. Part number: 22305991 (208 liters)	
Coolant, VCS yellow, concentrated. Part number: 22567295 (5 liters)	
Coolant, VCS yellow, ready mixed. Part number: 22567314 (5 liters)	
Quantity of ready-mixed VCS yellow coolant, (engine + standard radiator + hoses + expansion tank)	21 liters (5.5 US gallons)

Volumes may differ if the installation has extra coolers / radiators connected.

Volvo Penta products for North America

Oil quantity in engine, including filter. TAD1140VE - TAD1172VE	37 liters (9.77 US gallons)
Engine oil. Part number: 40005011 (1 US quart) Engine oil. Part number: 40005012 (1 US gallon) Engine oil. Part number: 40005013 (5 US gallons) Engine oil. Part number: 40005014 (55 US gallons)	
Coolant, VCS yellow, concentrated. Part number: 21485012 (1 US gallon)	
Coolant, VCS yellow, ready mixed. Part number: 21485014 (1 US gallon)	
Quantity of ready-mixed VCS coolant, (engine + standard radiator + hoses + expansion tank)	21 liters (5.5 US gallons)

Volumes may differ if the installation has extra coolers / radiators connected.

47709866 05-2017 © AB VOLVO PENTA

Engine

Maintenance Schedule

The Volvo Penta engine and its equipment are designed for high reliability and long life. The engine is built so as to have minimal environmental impact. These qualities will be retained and unnecessary malfunctions avoided if service is provided according to the maintenance schedule.

Service intervals

Service items can be found in the Service Record available for download at **www.volvopenta.com**.
Search under tab: Manuals.

Extended service intervals

The interval between engine oil changes may be extended in certain circumstances. To determine whether the service interval may be extended, Volvo Penta's conditions for extended service intervals must be met and an oil analysis performed.
The Volvo Penta dealer has further information.

Where both operating hours and calendar times are specified, perform the maintenance item at whichever time is the sooner.

General inspection

General inspection

Make a habit of visually inspecting the engine and engine compartment before the engine is started and after operation once the engine is stopped. This will help you to discover quickly if anything abnormal has happened, or is about to happen.

Look especially carefully for oil, fuel and coolant leakages, loose bolts, worn or poorly-tensioned drive belts, loose cable connections, damaged electrical cables and hoses. This inspection only takes a few minutes, but can prevent serious malfunctions and expensive repairs.

⚠ WARNING!
If an oil, fuel or coolant leak is detected, the cause must be investigated and the fault rectified before the engine is started.

Component location

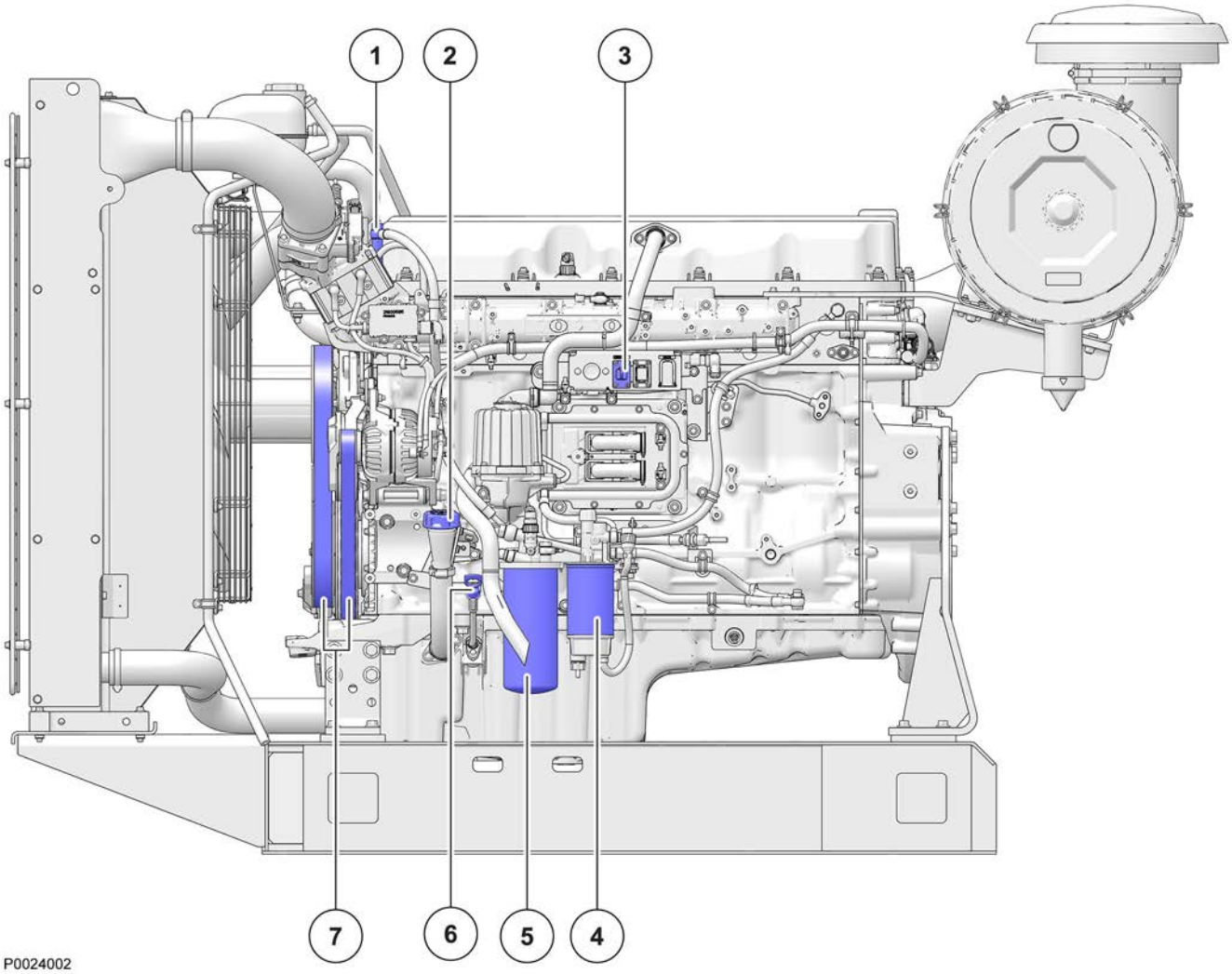

1 Purging valve, fuel
2 Oil filler
3 Diagnostic connector
4 Fuel pre-filter
5 Fuel filter
6 Oil dipstick
7 Drive belts

47709866 05-2017 © AB VOLVO PENTA

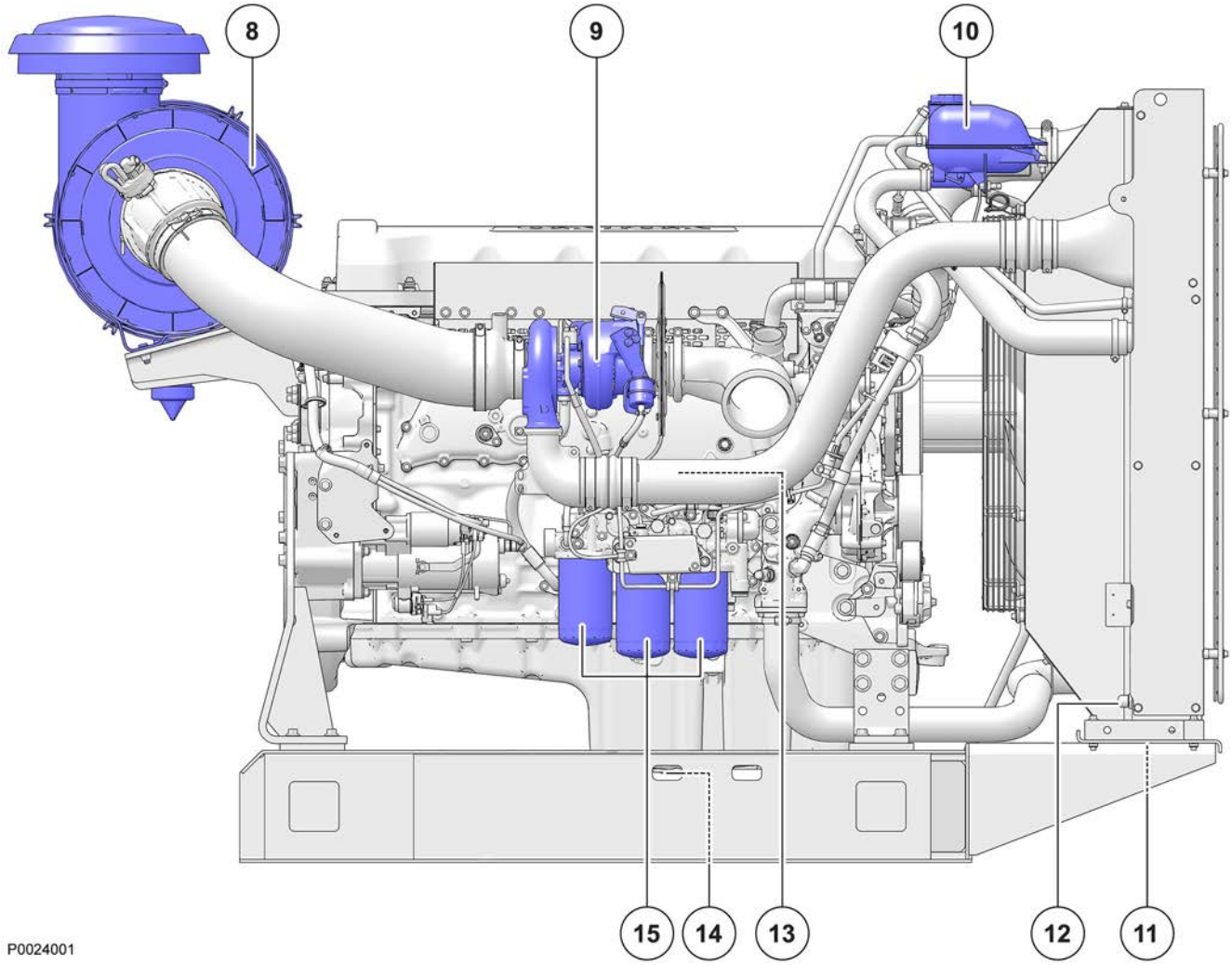

8 Air filter
9 Turbocharger
10 Expansion tank, coolant
11 Coolant drain, std radiator
12 Coolant drain, HD radiator
13 Draining coolant, engine block
14 Engine oil drain, bottom plug
15 Oil filter

General advice for electronic protection

The following advice must be complied with to avoid damage to the engine control unit and other electronics.

IMPORTANT:
Switch off the main switch before connecting or disconnecting a connector.

- Never switch off the current at the main switch when the engine is running.
- Never disconnect a battery cable when the engine is running.
- Switch off the main switches or disconnect the battery cables when fast-charging the batteries.
- **NOTICE!** It is not necessary to switch off the main switches during normal maintenance charging.
- Only batteries may be used as a start aid. A jump start unit is able to supply very high voltage which may damage the control unit and other electronics.
- Take extreme care so that the harness terminals do not come into contact with oil, water or dirt if a connector is removed from a sensor.

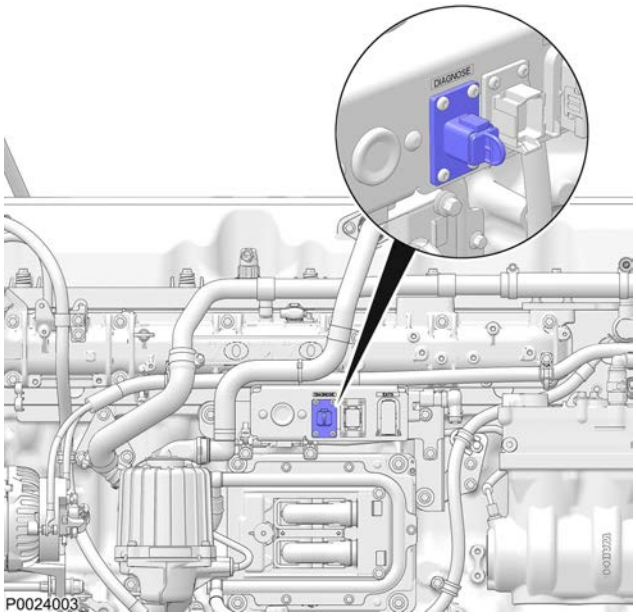

The diagnostics socket is located on the side of the engine next to the fuel pre-filter.

47709866 05-2017 © AB VOLVO PENTA

Air Filter

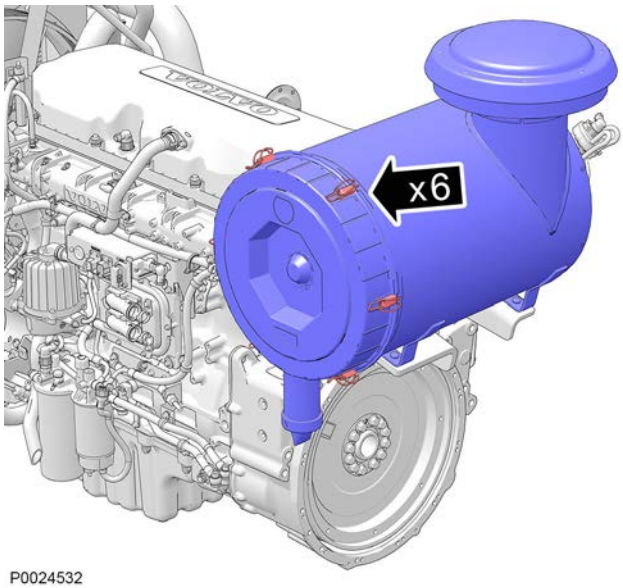

P0024532

The engine air filter is installed in a housing that is connected to the turbocharger inlet pipe.

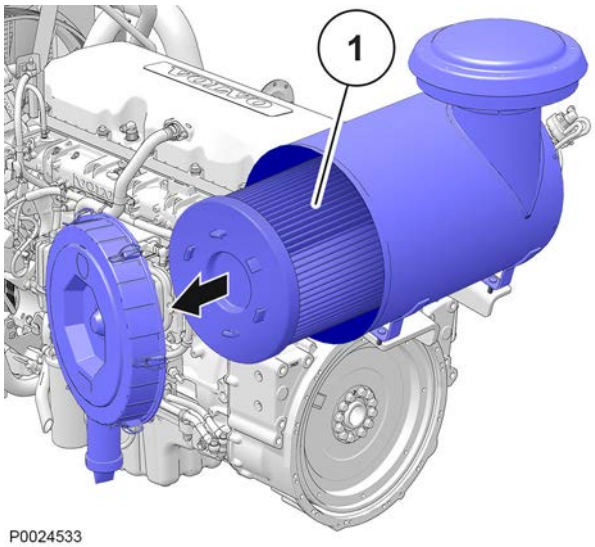

P0024533

Replacing the air filter

1 Open the fasteners and remove the cover.

2 Remove the filter (1) by pulling it straight out.

3 Wipe clean around the attachment point.

4 Install the new filter.

5 Refit the cover and close the fasteners.

NOTICE! Discard the old filter. It is not meant to be cleaned.

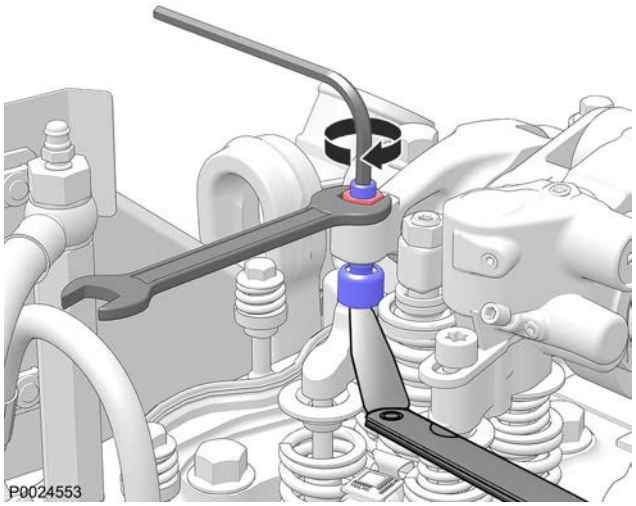

Valves, Adjustment

Adjusting valve clearance is a task intended for workshop trained personnel. Refer to the Workshop Manual.

Note the interval in the maintenance schedule for your engine.

47709866 05-2017 © AB VOLVO PENTA

Lubrication System

When you work with Chemicals, Fuel and Lubrication Oil, Change

NOTICE! Apply barrier cream to your hands and always use protective gloves for work which involves contact with oil, fuel and similar. Continuous skin contact with engine oil dries the skin and can be hazardous.

Engine oil, change

Change the engine oil and filter within the recommended service intervals.

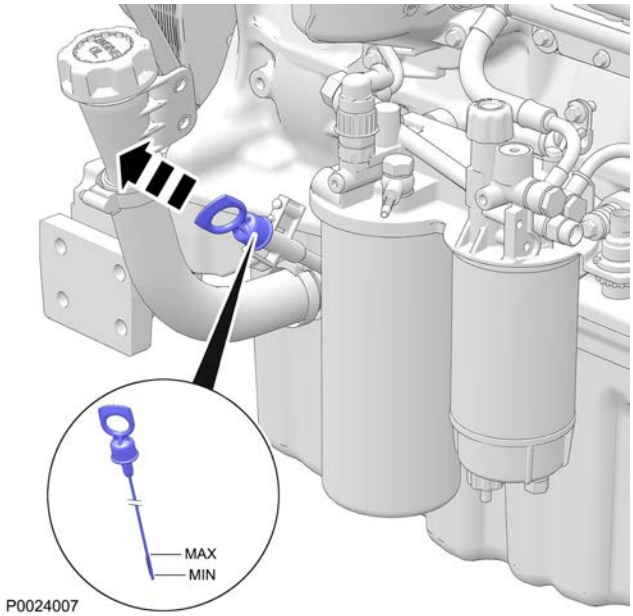

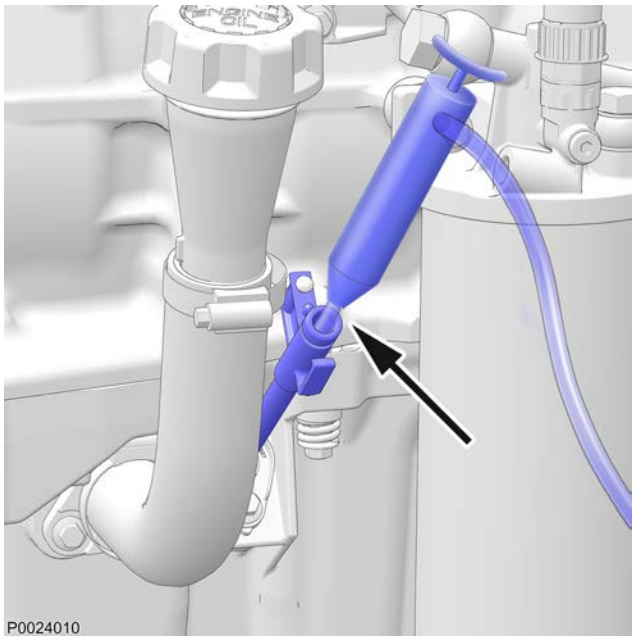

Drain the engine oil by connecting a pump to the oil dipstick hole and drawing out the oil.

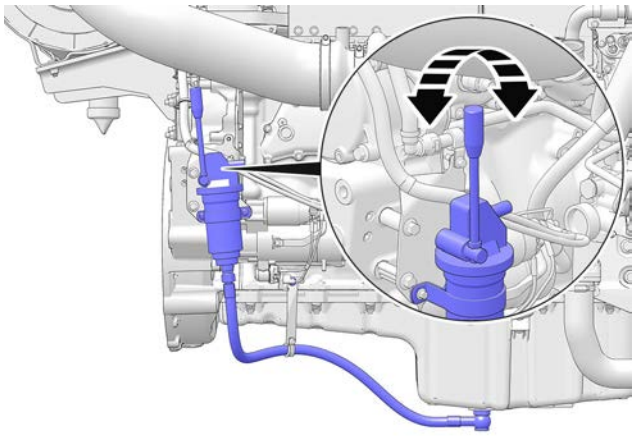

P0024005

Alternatively, permanently connect a hand pump to the bottom plug (recommended).

NOTICE! If the engine oil is hot, the oil will drain out faster.

47709866 05-2017 © AB VOLVO PENTA

Oil filter, Change

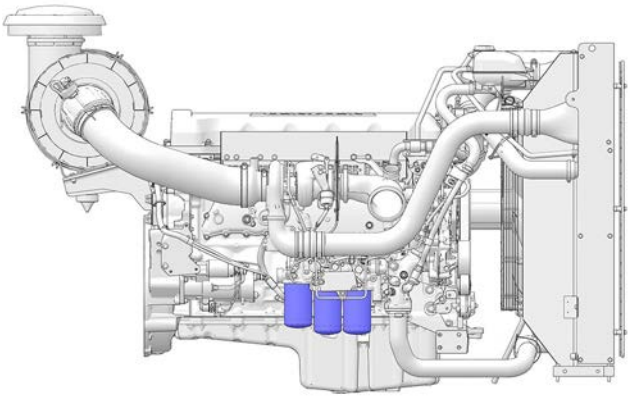

P0024551

We strongly recommend that only oil filters approved by Volvo Penta be used.
The wrong type of oil filter can lead to increased wear and damage, e.g. to bearings and crankshaft.

Removal

Oil filter removal

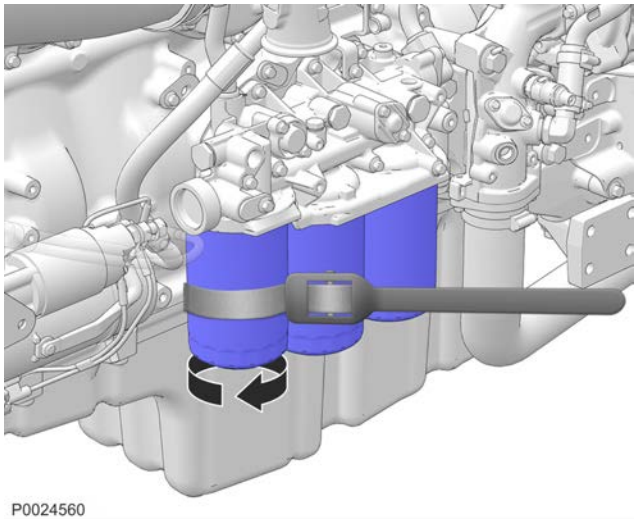

P0024560

1 Remove the oil filters with a universal puller.

2 Clean the filter attachment on the filter housing.

Installation

P0024561

3 Lubricate the new O-ring with engine oil before installing.

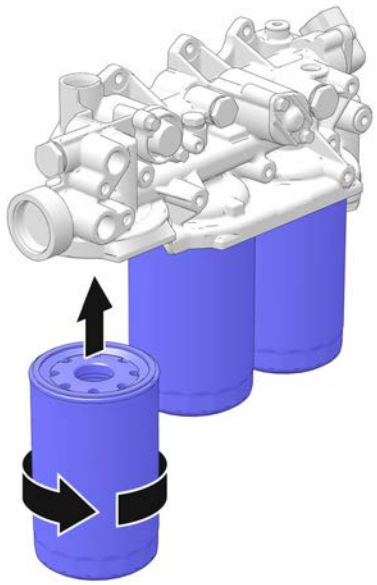

P0024562

4 Install the new filters.

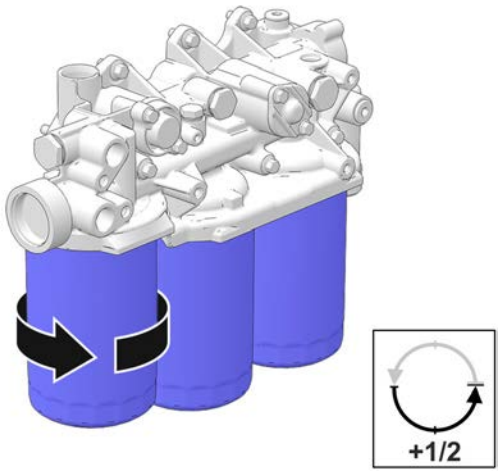

P0024563

5 Tighten by hand until the surfaces touch and then a further half turn.

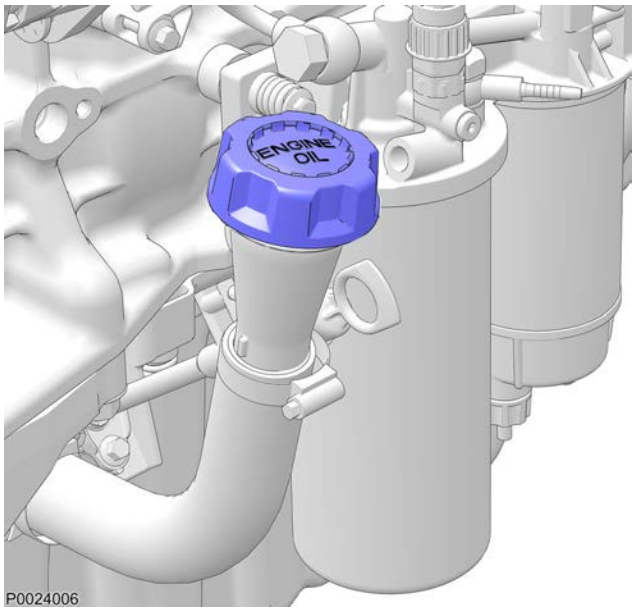

6 Fill with the required volume of oil; refer to the specifications/technical data.

7 Start the engine.

8 Check that no leakage occurs.

9 After a few minutes, switch off the engine and check the oil level.

10 Top up as necessary.

Oil Analysis

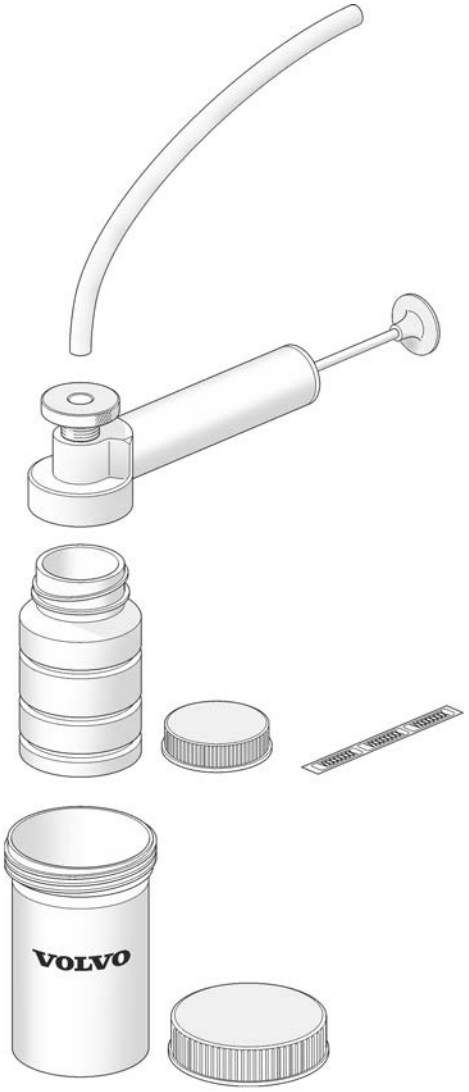

P0022867

Volvo Penta oil analysis

Volvo Penta oil analysis provides an extensive diagnostic check on the driveline condition. The oil analysis provides information for example on water content, fuel content, dirt and the amount of metallic particles in the oil as a result of component wear.

Thanks to early warning signs given by oil analysis, preventive maintenance and component replacement can be planned, so that unplanned shutdowns can be avoided.

Some engines allow the oil change intervals to be extended. There are two different service records available for these engines. Refer to the Volvo Penta Product Center

In order to find out more about Volvo Penta Oil Analysis, we recommend our on-line training.

47709866 05-2017 © AB VOLVO PENTA

Fuel System

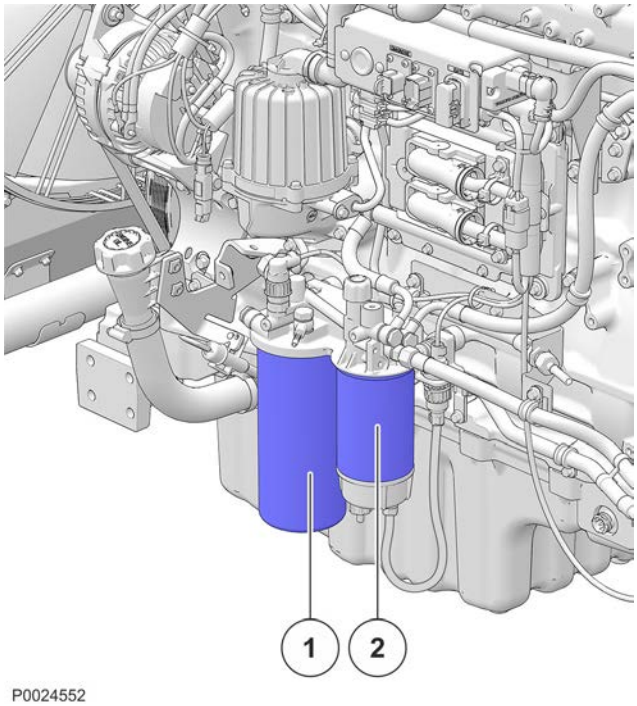

General

The fuel system has a fine filter (1) and a pre-filter (2) installed.

Fuel Pre-filter, Change

⚠ CAUTION!
Risk of skin damage.

NOTICE! Be prepared to gather up fluid.

Removal

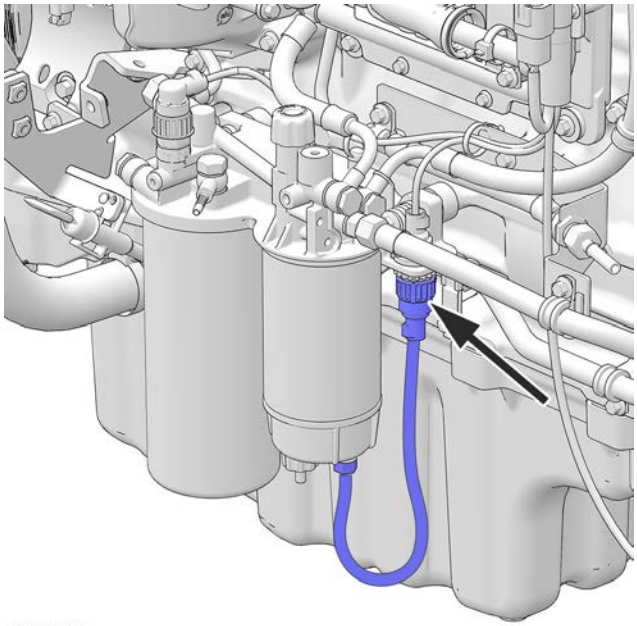
P0024895

1 Disconnect the water separator sensor connector.

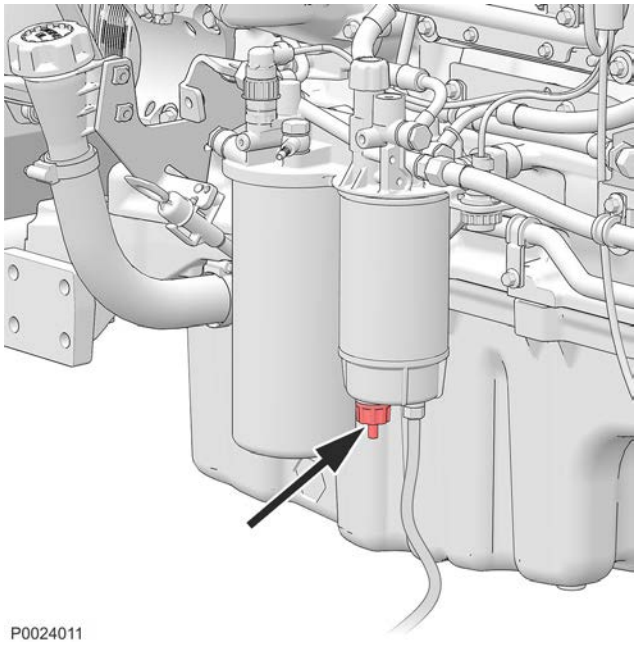
P0024011

2 Undo the drain nipple in the base of the water separator. Drain the filter.

3 Reinstall the drain nipple and tighten securely.

47709866 05-2017 © AB VOLVO PENTA

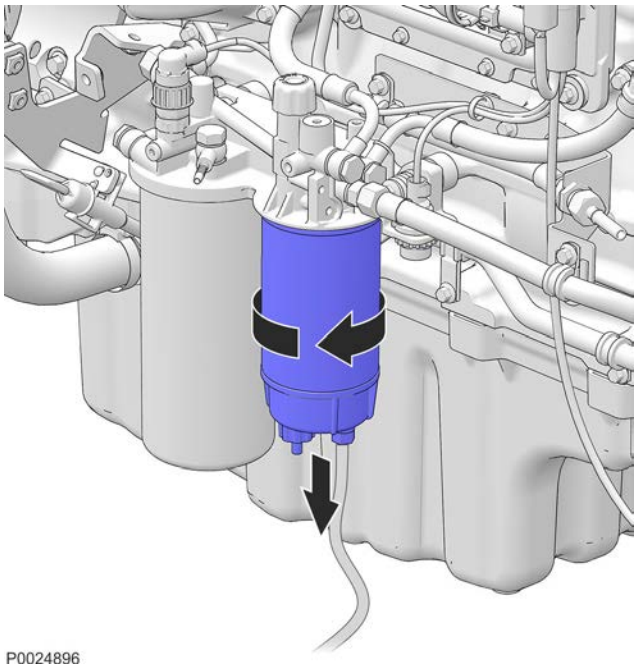

4 Remove the pre-filter together with the lower section of the water separator. Use a universal puller for the oil filter.

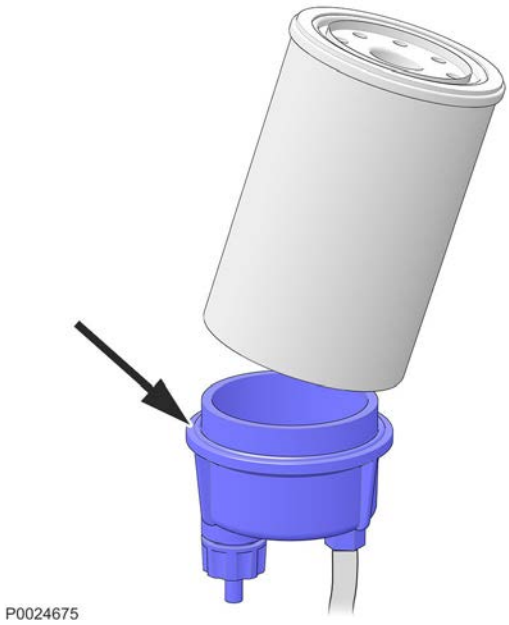

5 Remove the lower section of the water separator and O-ring from the filter.

6 Clean the lower section of the water separator and the contact surfaces. Check that the strainer and drain hole in the lower section are not clogged.

47709866 05-2017 © AB VOLVO PENTA

Installation

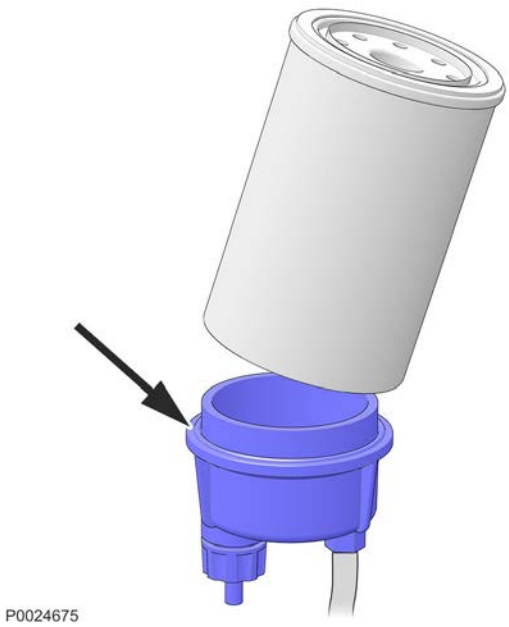

1 Install a new O-ring. Lubricate the seal with diesel.
Install the lower part of the water separator.

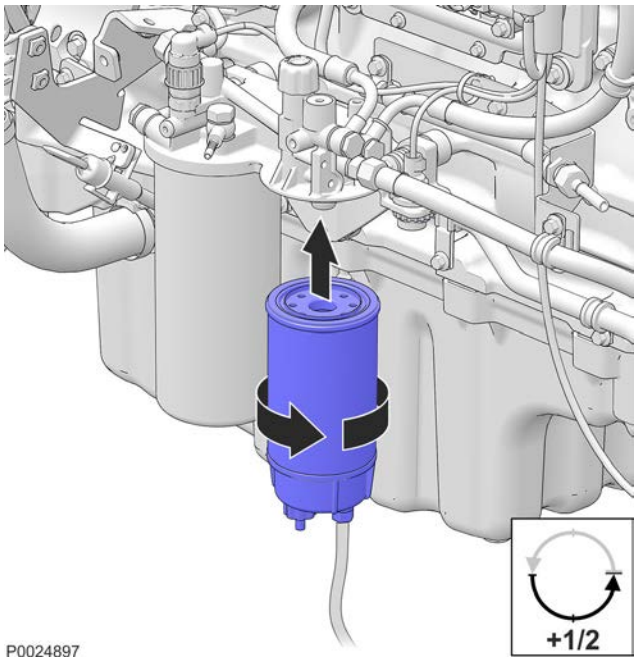

2 Lubricate the sealing surface with diesel and screw the new filter onto the filter bracket by hand until the seal touches the sealing surface.
Then tighten a further 1/2 turn.

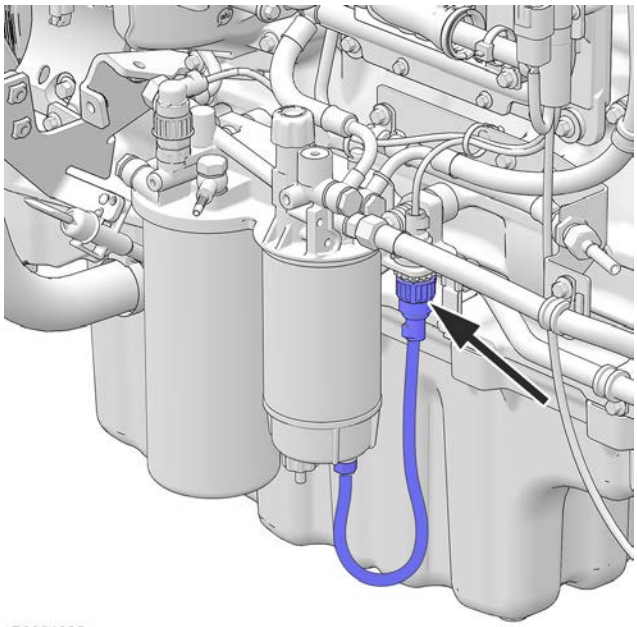

3 Connect the connector.

4 Open the fuel tap and purge the fuel pre-filter (refer to Fuel system, purging, at the end of this chapter). Check for leakage.

47709866 05-2017 © AB VOLVO PENTA

Fuel filter, Change

IMPORTANT!

Protect against dirt while work is in progress.

NOTICE! Be prepared to gather up fluid.

Removal

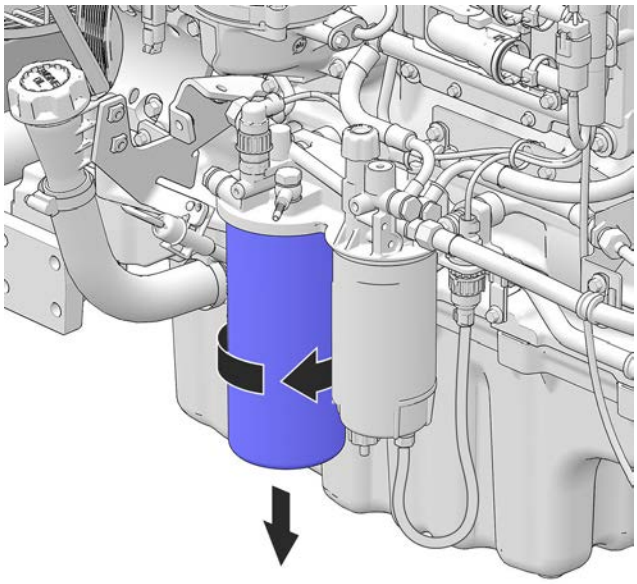

P0024898

1 Remove the fuel filter with the aid of a suitable filter puller. Let the fuel drip off into a collection vessel.

2 Clean around the filter housing sealing surface.

Installation

NOTICE! Do not fill the new filter with fuel before installation; there is a risk that contamination may cause malfunctions.

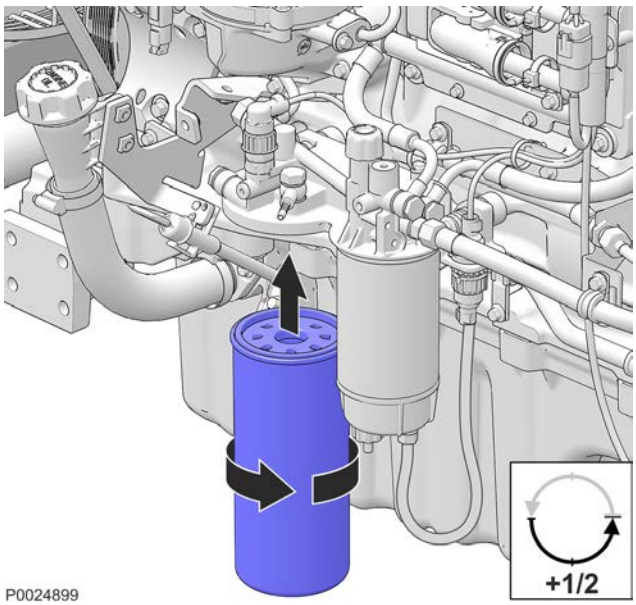

P0024899

1 Lubricate the seal with diesel and install the new fuel filter. Tighten according to the instructions on the filter.

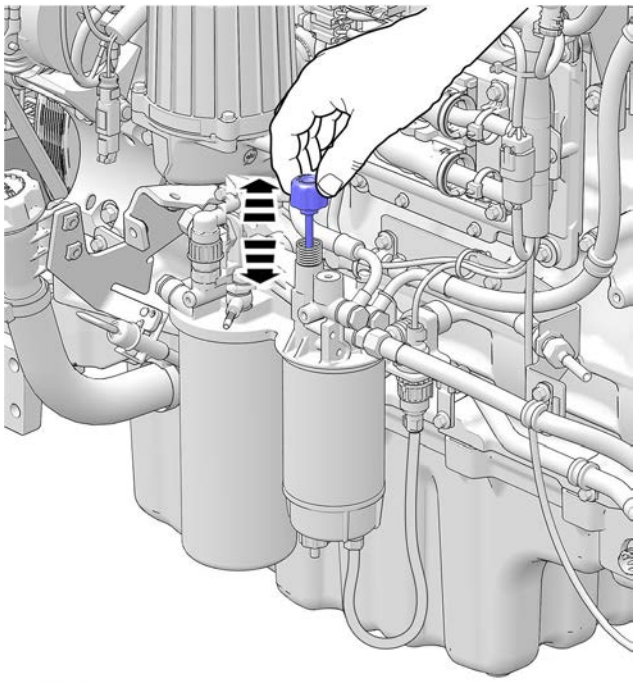
P0024900

2 Purge by hand using the pump on top of the filter bracket while opening the nipple at the highest point; see following chapter for info about purging.

3 Once purging is complete, start the engine and check that no fuel leaks are present.

47709866 05-2017 © AB VOLVO PENTA

Fuel system, bleeding

⚠ CAUTION!
Never disconnect a fuel line or component after the fuel pump to bleed. The fuel is under very high pressure and can penetrate the skin.

NOTICE! Check that there is sufficient fuel in the tank, and that any fuel taps are open.

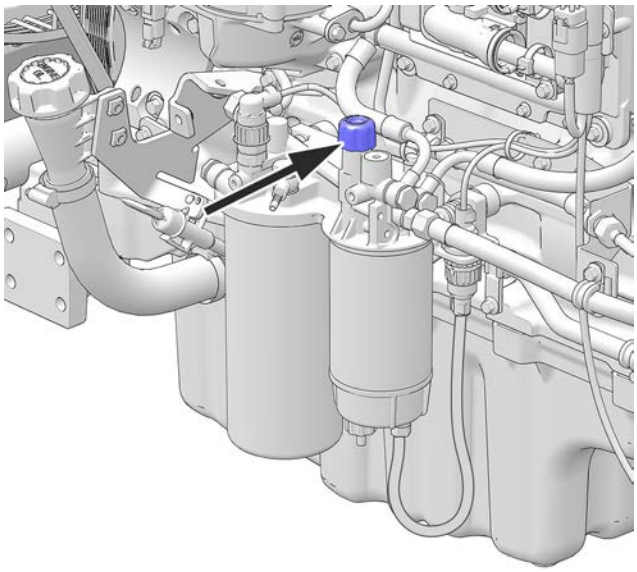

P0024902

1 Free the hand pump from the fuel filter bracket.

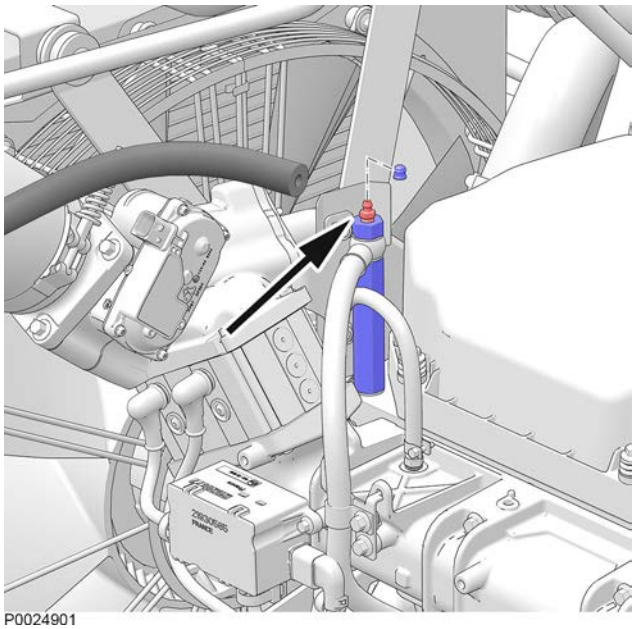

P0024901

2 Open the bleed nipple on the front fuel connection next to the valve cover and fit a hose.

3 Connect a hose and a bottle/receptacle to the other end of the hose to collect fuel when bleeding.

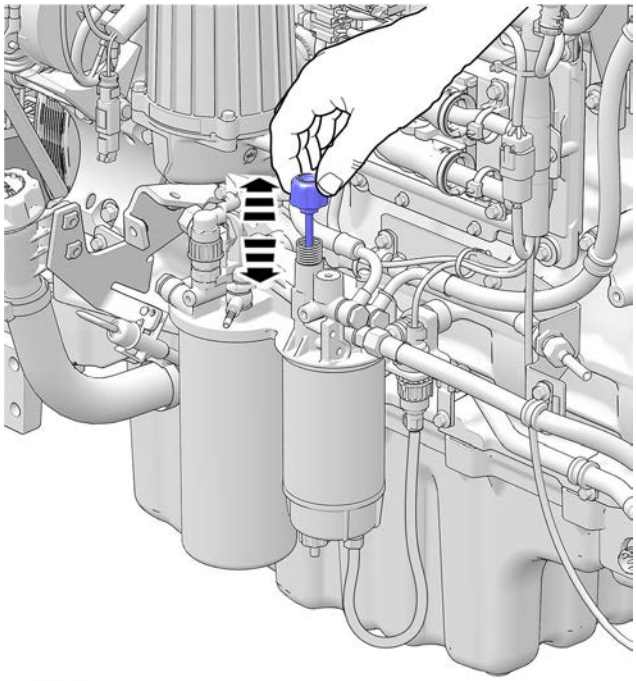

P0024900

4 Purge the fuel system by pumping with the hand pump until fuel flows without air bubbles.

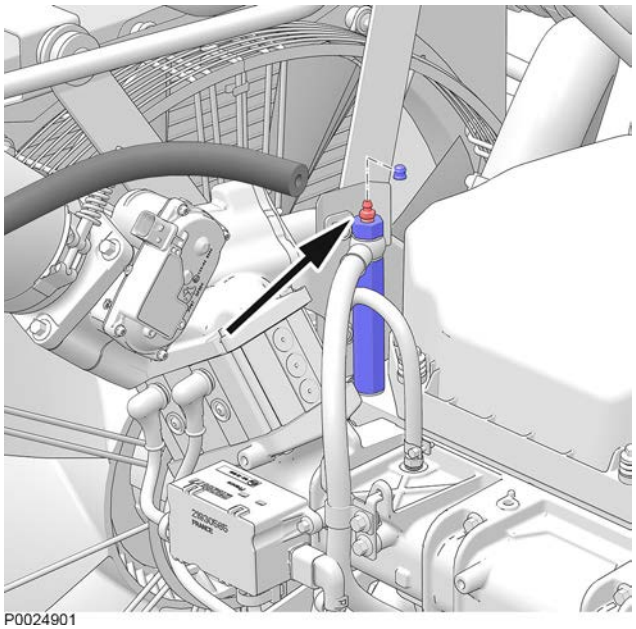

P0024901

5 Close the nipple.
Tightening torque: 3.5 Nm (2.6 lbf·ft)

6 Remove the hose and replace the rubber cap.

47709866 05-2017 © AB VOLVO PENTA

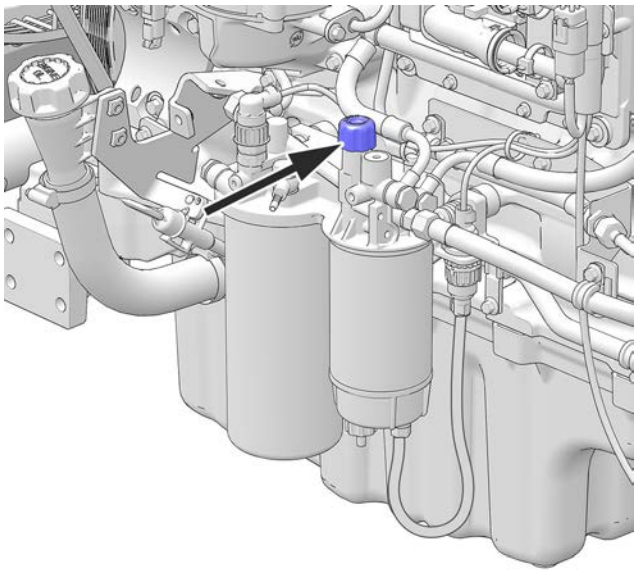

P0024902

7 Tighten the fuel pump handle.

8 Wipe dry any spilled fuel.

9 Start the engine and let it idle.

10 Check that no leakage occurs.

Exhaust System

Turbocharger, Inspection

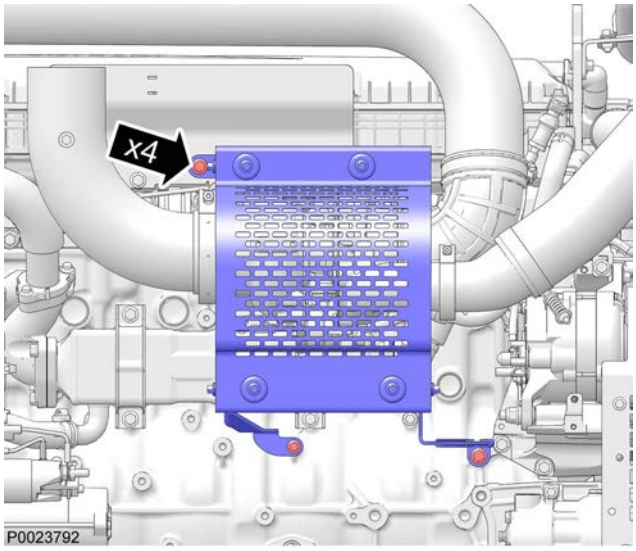

Inspecting the turbocharger and charge air pipe

1 Remove the protection panel secured by 4 pcs bolts.

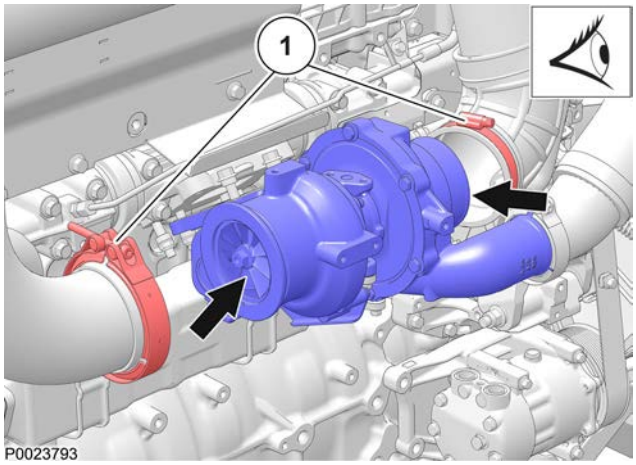

2 Remove the **inlet pipe** and the **exhaust pipe** (1).

3 Check the turbocharger with regard to damage to the compressor and turbine wheels.

4 In the case of damage, replace the turbocharger in its entirety.

NOTICE! We recommend that turbocharger replacement be carried out by a Volvo Penta workshop.

47709866 05-2017 © AB VOLVO PENTA

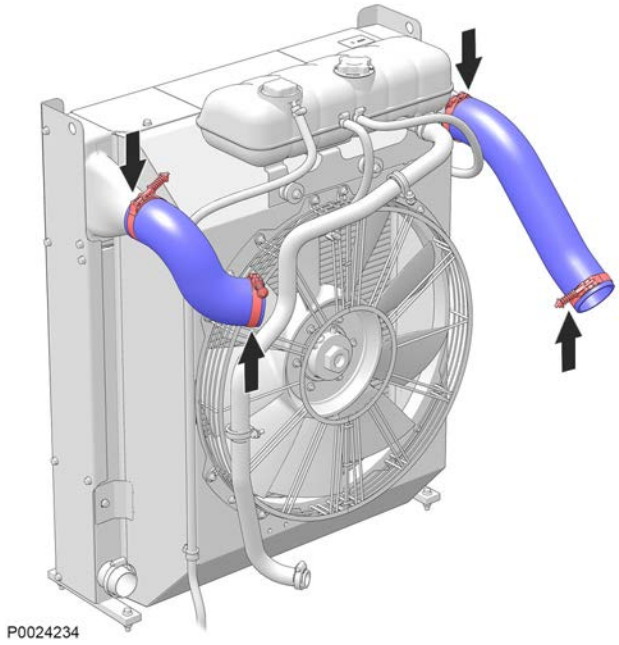

Charge Air Pipe, Leakage Check

Inspect the condition of the charge air hose connections and clamps with regard to cracks and other damage. Replace as necessary.

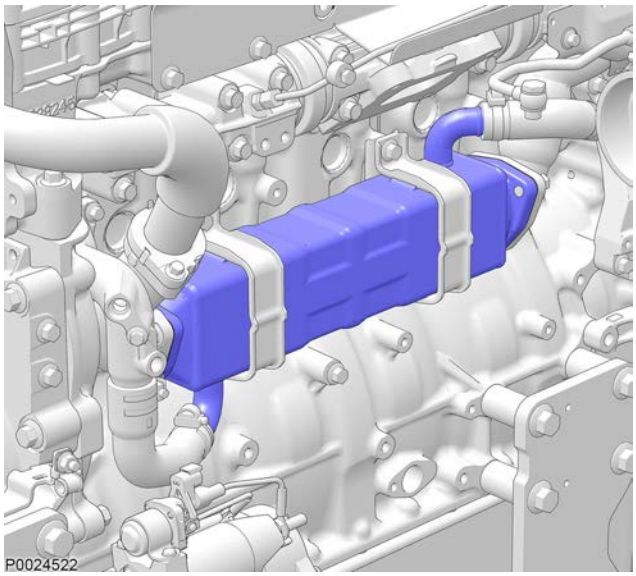

EGR cooler

EGR cooler

Refer to the maintenance schedule for the engine cleaning or replacement of the EGR cooler.
This job should be carried out by trained workshop personnel. Refer to the workshop literature for further information regarding the engine concerned.

NOTICE! Not all engines have EGR coolers.

NOTICE! EGR cooler shown for illustration purposes. Design and attachment differs between different engines.

47709866 05-2017 © AB VOLVO PENTA

SCR System

Engines with SCR aftertreatment, has filters that must be replaced. Check the replacement intervals in the maintenance schedule for your engine.

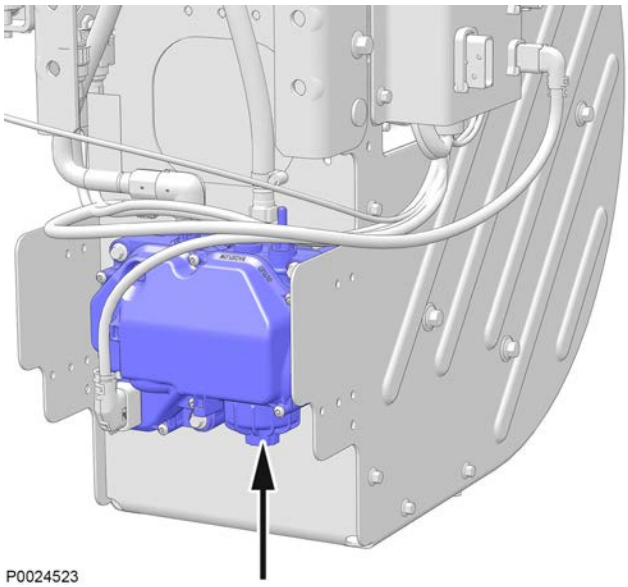

Position on the pump unit filter (arrow)

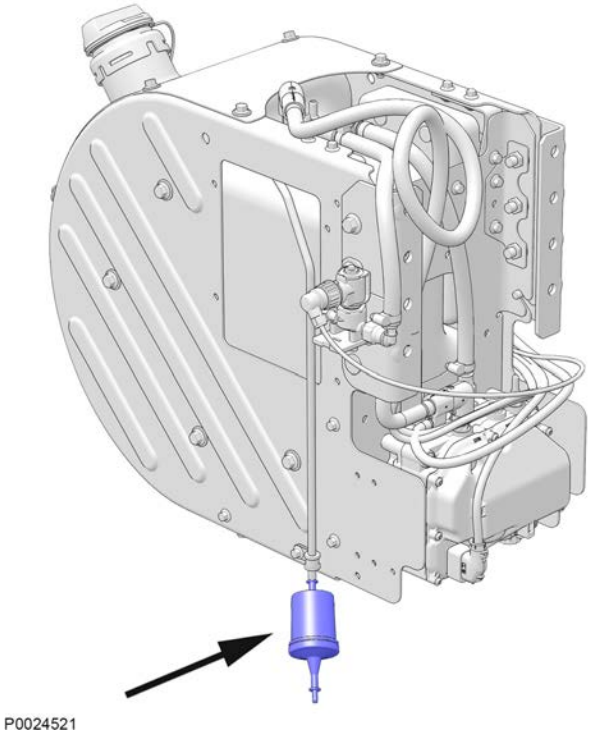

Filter for air to the AdBlue/DEF tank (arrow).

NOTICE! Maintain a high level of cleanliness when working with the SCR system. Wipe clean around covers and connections before beginning work. Make sure the filter and gaskets do not come into contact with dirty surfaces before installation.

Replacing the filter to the AdBlue/DEF pump

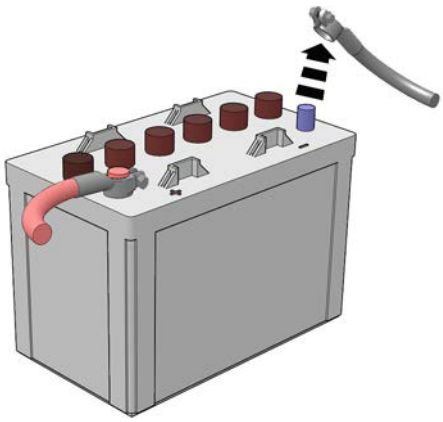

P0019364

1 Turn off the engine. Wait until the pump unit stop as it always carries out a hose emptying sequence.

2 Disconnect the battery negative terminal.

3 Place a collection vessel under the filter cover.

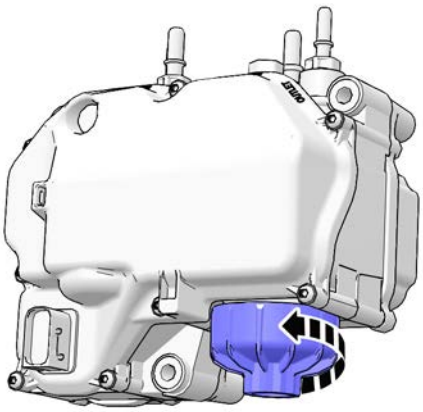

P0019389

4 Undo the filter cover.

47709866 05-2017 © AB VOLVO PENTA

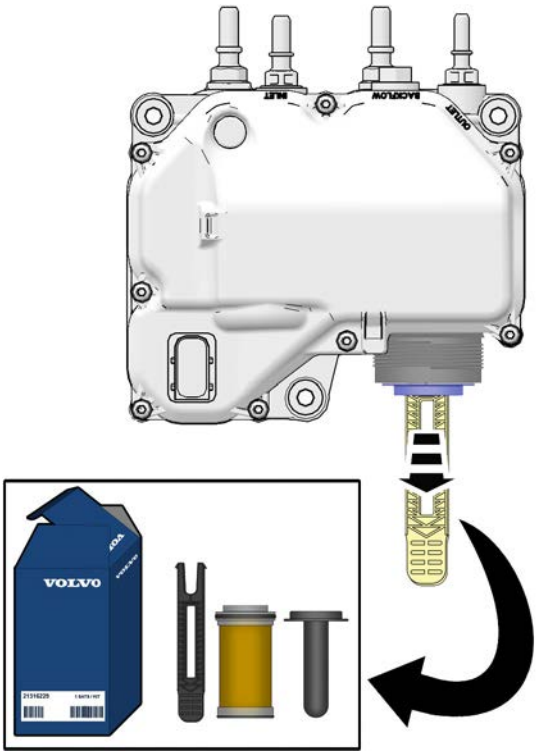

P0019390

5 Use the puller (supplied with the filter kit) to pull out the filter by first pressing it into the filter hole until it clicks.

6 Pull out the filter.

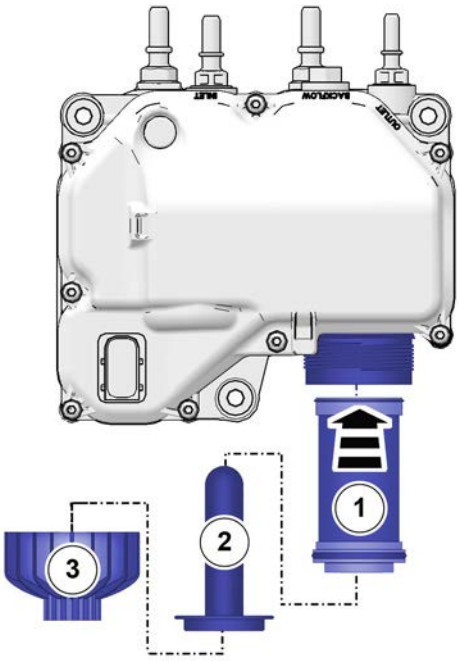

P0019391

7 Install the new filter (1).
Install the rubber gasket (2).
Screw the filter cover (3) back on.

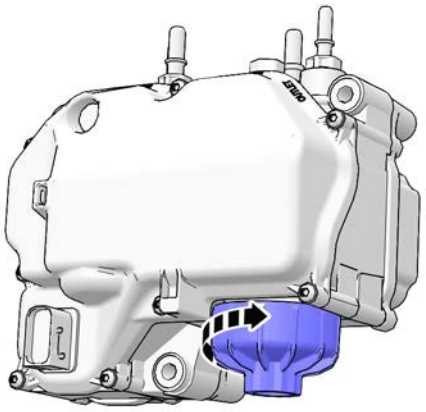

P0019392

8 Tighten the cover.
Tightening torque: 20 +5 Nm (14.8 +3.68 lbf ft.)

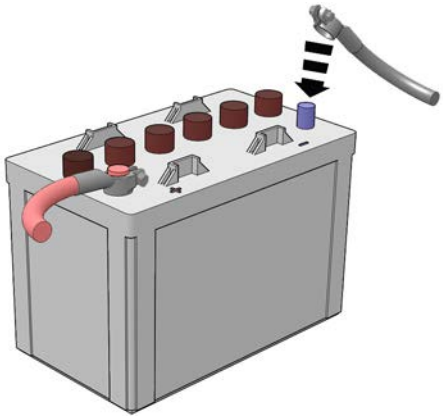

P0019365

9 Reconnect the battery negative terminal.

10 Start the engine. Check operation and inspect for leaks.

11 Delete any fault codes.

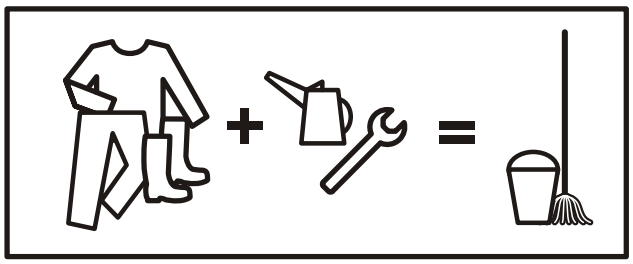

p0013225

NOTICE! Take appropriate care of equipment and surplus AdBlue/DEF solution.

47709866 05-2017 © AB VOLVO PENTA

Cooling System

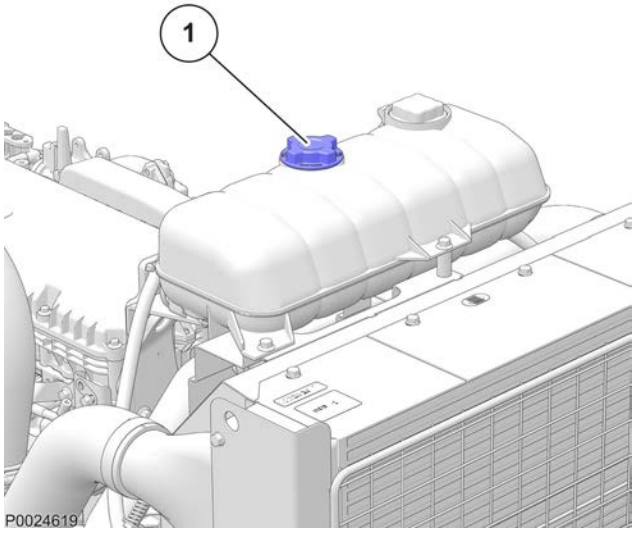

Coolant Level, Checking and Topping Up

The engine's internal cooling system makes sure the engine works at the right temperature. It is a closed system that must always be filled with a mixture of concentrated coolant and water in order to protect the engine against internal corrosion, cavitation and bursting due to freezing.

NOTICE! Different kinds of coolant may not be mixed.

⚠ WARNING!
Do not open the coolant filler cap when the engine is hot. Steam or hot fluid could spray out, causing severe burns.

1 Check the coolant level in the expansion tank.

2 Top up with coolant as required (1), so that the level is between the MIN and MAX marks.

Replacing coolant

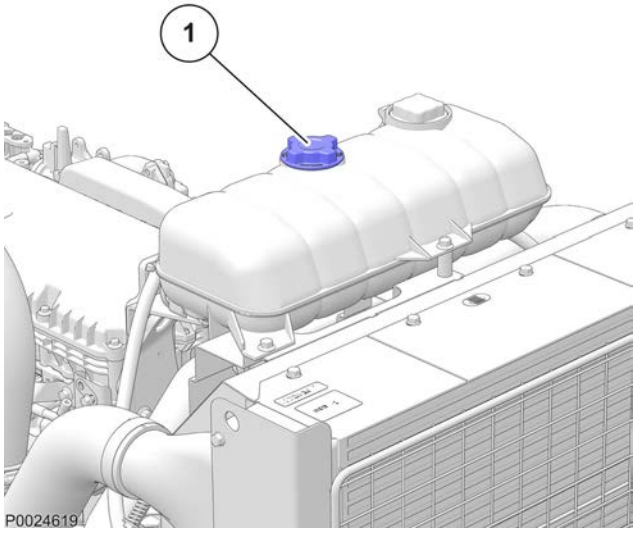

1 Open the filler cap (1).

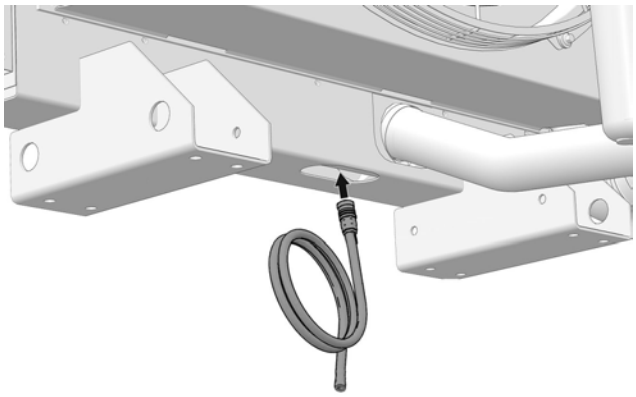

2 Connect a drain hose and drain the coolant out of the radiator. The drain nipple is located underneath standard radiators and on the side of HD radiators.

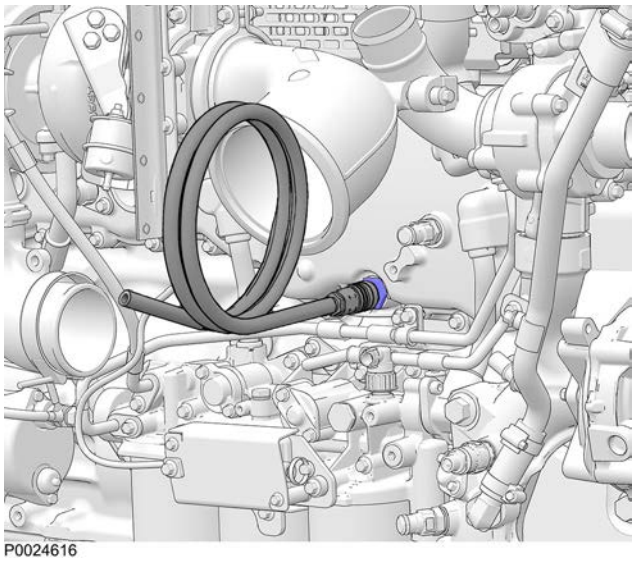

3 Connect a drain hose to the engine block and drain the coolant from the engine. Use a receptacle to collect the coolant.

4 Remove the hoses and close the nipples/taps.

5 Refill with new, Volvo Penta-recommended coolant.

NOTICE! Cooling performance is reduced by deposits in the radiator and cooling galleries. The cooling system should be cleaned when coolant is replaced. Cooling system cleaning is described in the Workshop literature.

NOTICE! Check anti-freeze protection every year, if the coolant is not replaced.

47709866 05-2017 © AB VOLVO PENTA

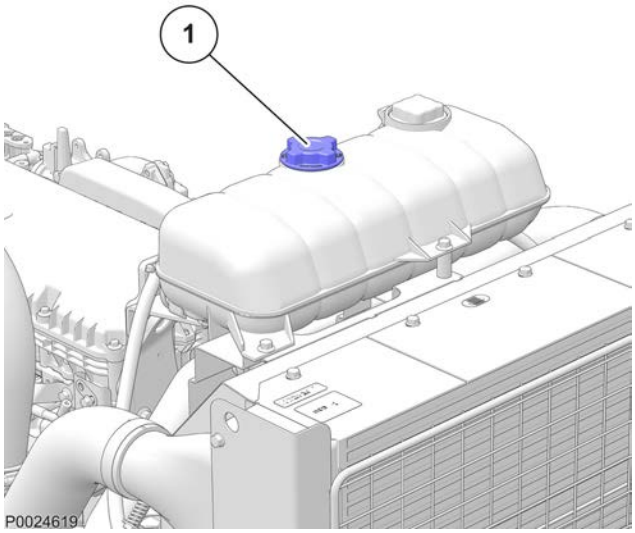

Filling a completely empty system

Mix the coolant in advance, to ensure the cooling system is filled with the correct mixture, (applies to concentrated coolant).

If a heating unit is connected to the engine cooling system, its valves must be opened and the installation vented during filling.

NOTICE! The engine may not be started before the system is full.

1 Check that all drain points are closed.

2 Open the filler cap (1).

3 Top up and check that the coolant level is between the MIN and MAX marks on the expansion tank.

4 Start the engine when the cooling system has been filled and vented.

5 Open any venting nipples shortly after starting the engine, to allow trapped air to escape.

6 Run the engine at idle a while.

7 Increase engine revolutions for a few minutes. Stop the engine and check the coolant level.

8 Run the engine until the thermostat opens. Check the level again when the engine has cooled. Top up as necessary.

NOTICE! Only fill coolant when the engine is cold and stopped. Fill slowly, to allow air to flow out.

Coolant Filter, Change

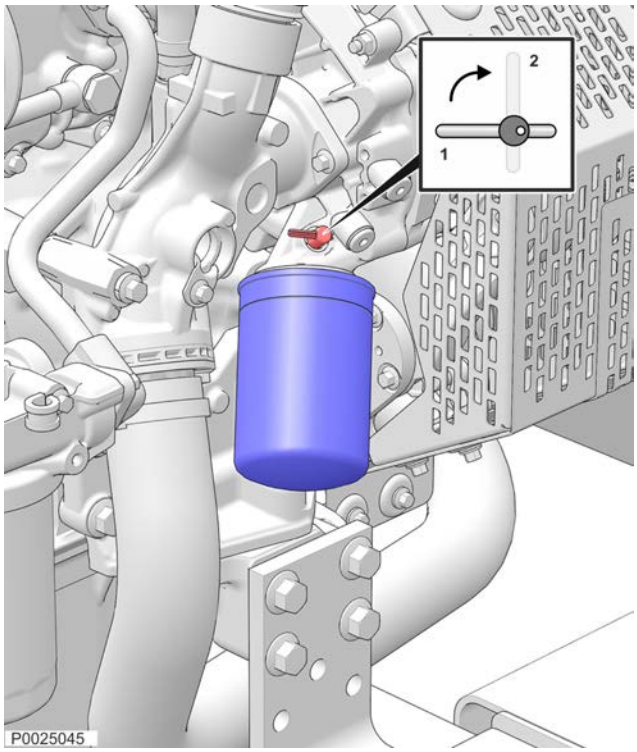

If the engine has a coolant filter, the latter must be replaced; refer to the service interval for the engine concerned in the maintenance schedule.

NOTICE! There are no coolant filters on engines that use yellow VCS coolant. Do not mix different kinds of coolant.

1 Close the filter housing tap (1).

2 Clean around the filter and remove it.

3 Lubricate the new filter gasket with petroleum jelly or soapy water.

4 Tighten the filter until the gasket touches and then tighten a further one half turn.

5 Open the tap on the filter housing.

6 Start the engine and check for leaks.

NOTICE! When working on an engine where more than five liters of new coolant is added, a new coolant filter must always be installed.

47709866 05-2017 © AB VOLVO PENTA

Cooling Package, Disassembly

Replacing drive belts

It may be necessary to remove the radiator assembly to change the drive belt.
Belt replacement is covered as a separate item after this chapter.

IMPORTANT!

Turn off the main switch before any work is carried out.

Removal

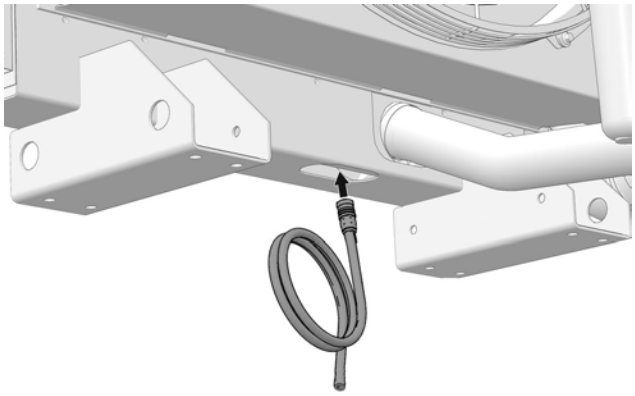

P0023983

1 Drain the coolant from the radiator and engine. Be prepared to gather up fluids.

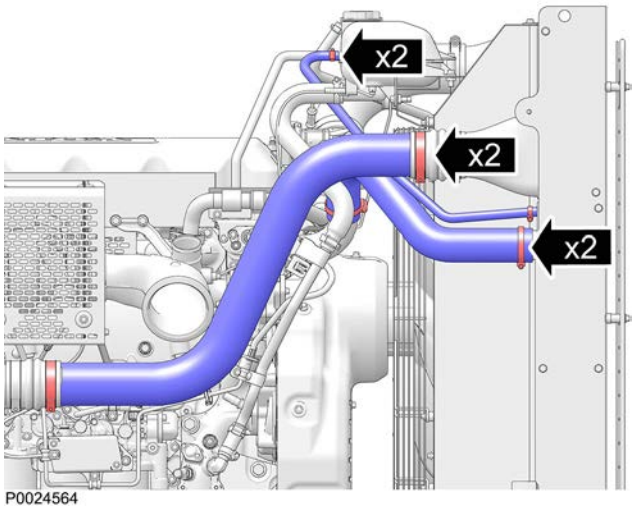

P0024564

2 Remove all the right side hoses between the engine and the radiator. Remove the turbocharger delivery pipe, water pipe and expansion tank pipe.

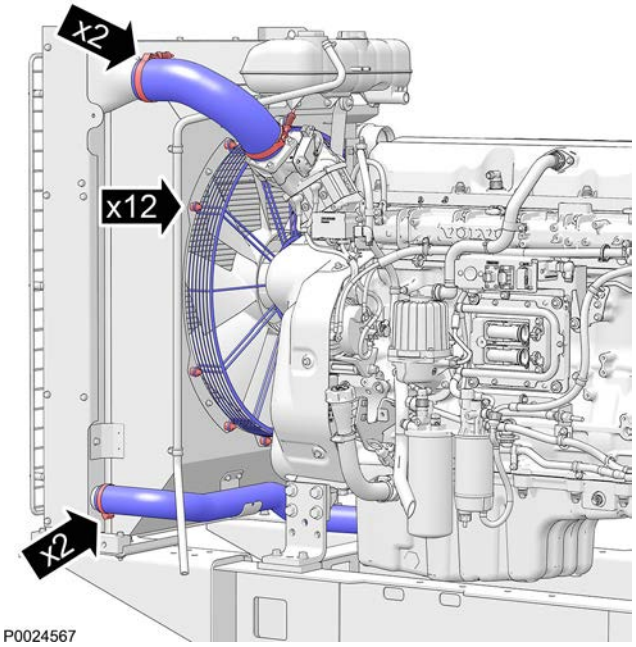

3 Remove all the left side hoses between the engine and the radiator. Remove the inlet pipe, water pipe, fan guard and expansion tank pipe.

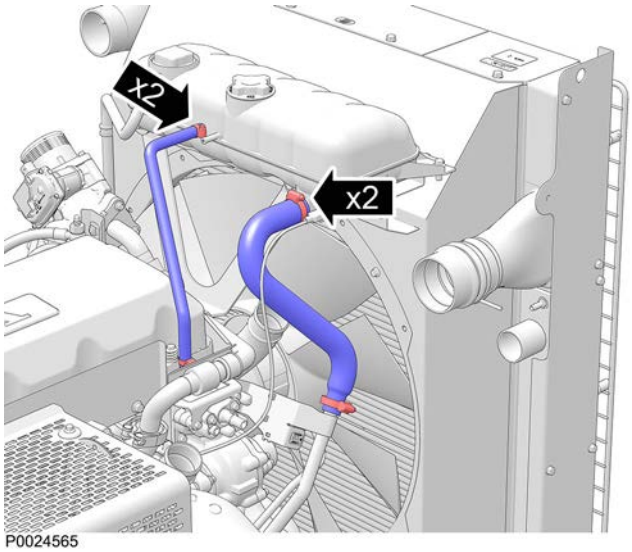

4 Remove the hoses between the engine and the expansion tank.

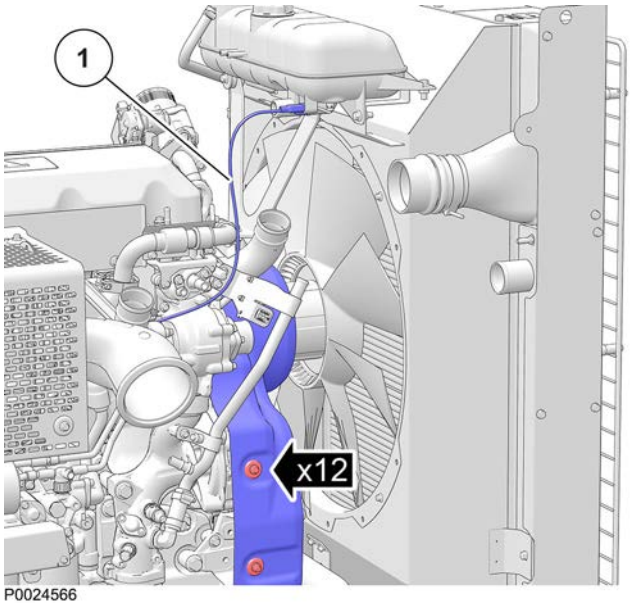

P0024566

5 Remove the fan guard and disconnect the connector (1) to the coolant sensor in the expansion tank.

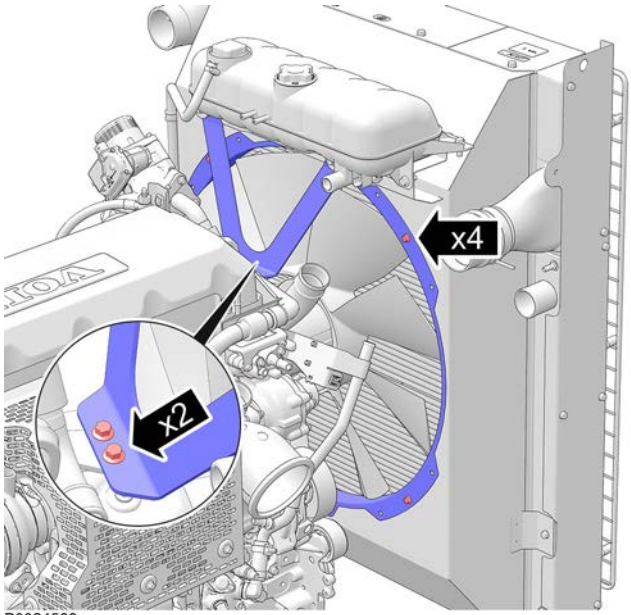

P0024568

6 Remove the radiator stay between the engine and the radiator.

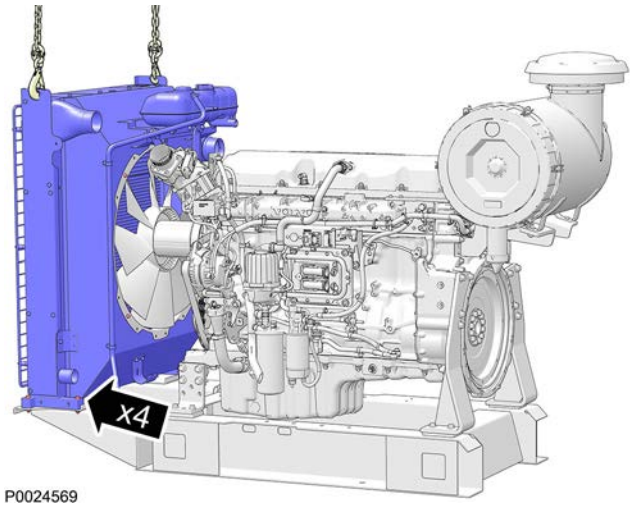

7 Attach the radiator to a lifting device. Undo the lower bracket and release the radiator for further work.

8 Remove the fan if the belt cannot be lifted over it.

9 The belts are now replaced. The procedure follows this chapter; refer to **Drive belt, replacement**.

47709866 05-2017 © AB VOLVO PENTA

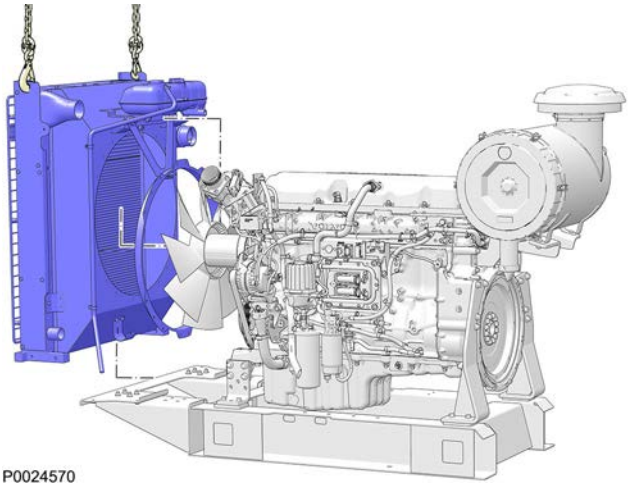

Installation

Reinstallation of the radiator assembly and hoses takes place in reverse order.

Take the opportunity to flush clean the radiator and engine internally.
Refer to the instructions in the workshop manual.

Fill up with coolant.
Refer to the Coolant level, checking and filling chapter.

Turn the main switch on.

Drive Belt, Change

Drive belt, water pump

NOTICE! Always replace belts that are greasy, worn or damaged.

Removal

⚠ CAUTION!
Pinch hazard. Keep fingers clear.

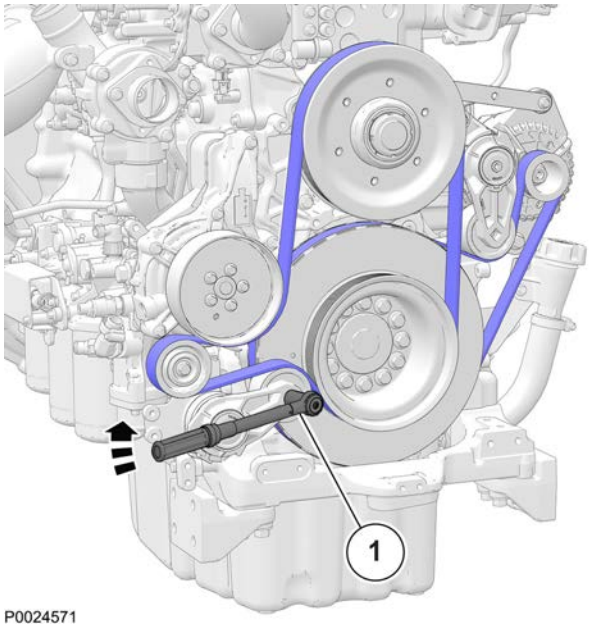

P0024571

1 Clear a space in front of the engine. Remove the engine fan guard, cooling fan and fan ring. If necessary, also remove the radiator assembly.

2 Fit a 1/2" socket drive to the belt tensioner (1).

3 Take the load off the belt tensioner (1) and remove the belt.

4 Check the function of the belt tensioner and idler wheel bearing. If there is play in the bearing, the idler wheel must be replaced.

47709866 05-2017 © AB VOLVO PENTA

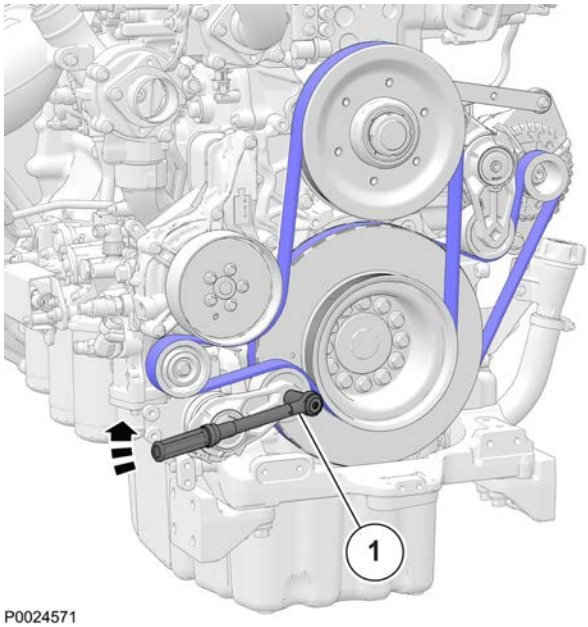

Installation

1 Fit a 1/2" socket drive to the belt tensioner (1).

2 Take the load off the belt tensioner (1) and install the new belt.

3 Deploy the belt tensioner (1). Also check that the belt is correctly aligned on all pulleys.

4 Reinstall the fan guards, fan ring, cooling fan and the radiator assembly as necessary.

Checks

The drive belt has an automatic belt tensioner and does not need to be adjusted.

Drive belt, alternator

Removal

⚠ CAUTION!
Pinch hazard. Keep fingers clear.

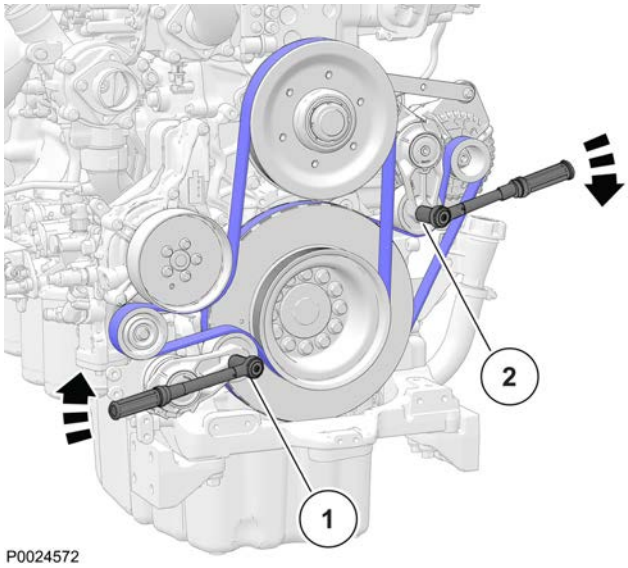

1 Clear a space in front of the engine. Remove the engine fan guard, cooling fan and fan ring. If necessary, also remove the radiator assembly.

2 Fit a 1/2" socket drive to the belt tensioner (1).

3 Take the load off the belt tensioner (1) and lift the belt away from the water pump.

4 Fit a 1/2" socket drive to the belt tensioner (2).

5 Take the load off the belt tensioner (2) and lift the alternator drive belt off.

6 Check the function of the tensioners and idler wheel bearings. If there is play in the bearings, the idler wheels must be replaced.

47709866 05-2017 © AB VOLVO PENTA

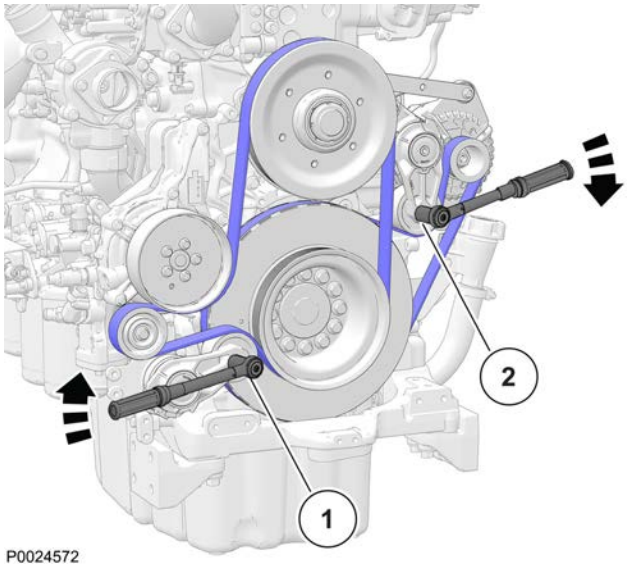

Installation

1 Fit a 1/2" socket drive to the belt tensioner (2) and take the load off it.

2 Install the new alternator belt.

3 Deploy the belt tensioner (2) and also check that the alternator belt is correctly aligned on all the pulleys.

4 Take the load off the belt tensioner (1) and fit the drive belt to the water pump.

5 Deploy the belt tensioner (1). Check that the water pump belt is correctly aligned on all the pulleys.

6 Reinstall the fan guards, fan ring, cooling fan and the radiator assembly as necessary.

Checks

The drive belt has an automatic belt tensioner and does not need to be adjusted.

Long Term Storage

The engine and other equipment should be conserved to avoid damage during extended lay-ups (4-6 months or longer). Conservation protects the engine against freezing and corrosion damage.

The checklist below covers the most important points for the engine. Before taking the engine out of operation for an extended period, we recommend checks for any maintenance or repairs.

IMPORTANT:
Washing with a power washer: Never aim the water jet at radiators, charge air cooler, seals, rubber hoses or electrical components.

P0002089

- **For layups up to 8 months:**
  Replace the engine oil and engine oil filter and then run the engine until operating temperature.
- Check that the coolant has the requisite antifreeze qualities. Top up as necessary.
- Drain water, dirt and sludge from the fuel filter and fuel tank. Fill the fuel tank completely to prevent condensation.
- Disconnect the battery cables; clean and charge the batteries. Maintenance charge the batteries while the equipment is laid up. **An insufficiently charged battery can freeze and burst.**
- Clean the outside of the engine. Do not use a pressure washer to clean the engine.
- Touch up paint damage with Volvo Penta original paint or paint of the equivalent quality.
- Attach a tag into the engine with information about the date, type of conservation and the conservation oils used.
- Cover the air filter, exhaust pipe and engine as necessary.

See Service Bulletin: 05-2-104

47709866 05-2017 © AB VOLVO PENTA

Recommissioning

- Check the drive belts.
- Check the condition of all rubber hoses.
- Check the hose clamps.
- Check the coolant level. Top up as necessary.
- Connect the fully charged batteries.
- Remove the covers from the air filter and exhaust pipe.
- Start the engine and let it idle with no load a short while.
- Check that there are no oil, fuel or coolant leaks.

Checklist

Suggestions for the checklist in addition to the regular service items.

Check/action

- Check for leakage: fuel/water/exhaust.
- Check the hose clamps.
- Check the cable connections.
- Clean the battery terminals; remove any oxide. Check the electrolyte level.
- Clean the engine and engine compartment.
- Inspection/cleaning the fuel tank.
- Function check of other electrical systems.
- External cleaning of the radiator/radiator assembly.

Start the engine every six months

If the engine will be laid up for 6-8 months or more, it should be started and warmed up every six months as follows:

- Check the engine oil level.
- Check the coolant level.
- Connect the battery cables to the batteries (fully charged).
- Start the engine and run it for 2-3 minutes.
- Turn off the engine.
- Detach the battery cables.
- Check the engine compartment for any condensation.
- Ensure good ventilation.

47709866 05-2017 © AB VOLVO PENTA

P0002107

Battery, Maintenance

⚠ WARNING!
Risk of fire and explosion. Never allow an open flame or electric sparks near the battery or batteries.

⚠ WARNING!
Battery electrolyte is a corrosive acid and should be handled with care. If you spill or splash electrolyte on any part of the body, immediately flush the exposed area with liberal amounts of water and seek medical attention as soon as possible.

⚠ WARNING!
Ventilate the engine compartment before working on batteries or battery connections.

IMPORTANT:
Batteries can be damaged if they are left discharged, and can also freeze and burst easier in cold weather. If the engine is not going to be used for a longer period of time, the batteries should be fully charged, trickle charged if possible.

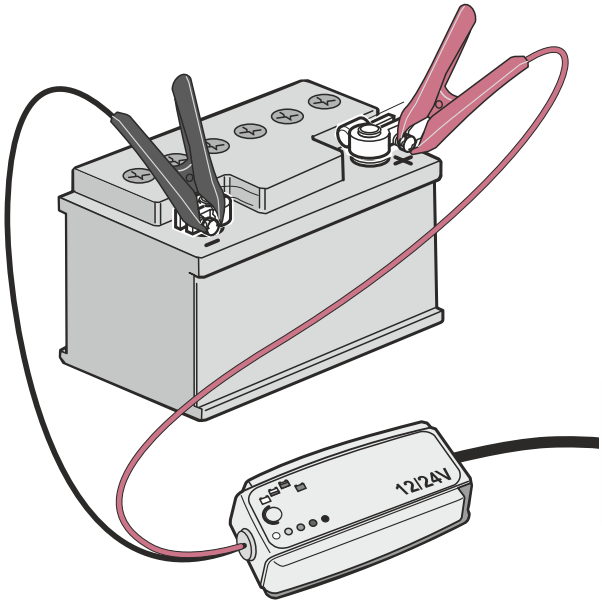

P0022892

Care

It is important always to follow the battery manufacturer's recommendations and instructions when replacing and charging batteries. Instructions for maintenance and charging may vary depending on battery type.
Modern batteries are usually maintenance free, but there are some recommended measures to avoid accidents and increase battery service life:

- Keep the batteries clean and dry. Contamination and oxide on the batteries and battery poles can cause stray currents, voltage drop and discharge, especially in damp weather.
- Remove oxidation from the battery poles and terminals using a brass brush.
- Tighten the terminals securely and grease them with terminal grease or petroleum jelly. Loose battery connections can cause damage to the engine electrical system.
- Charge the batteries regularly. Batteries kept at full charge enjoy maximum service life. The easiest way to check whether a battery needs charging is to use a volt meter.

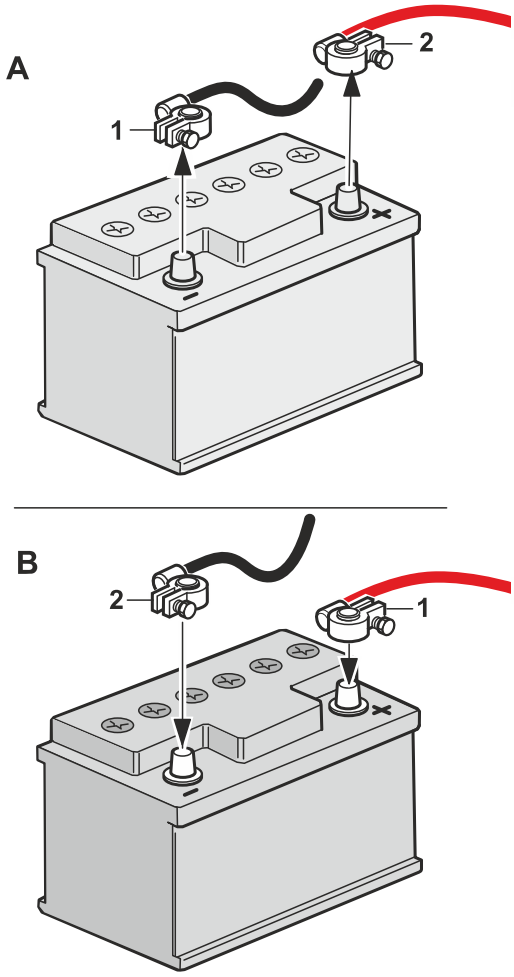

P0022893

Battery replacement

IMPORTANT:
Make sure that the new battery fulfills the specifications in *Technical Data*. Read the information supplied with the battery before you begin the installation.

IMPORTANT:
Do not disconnect the batteries with the engine running as sensitive electrical components may be immediately damaged.

⚠ WARNING!
Never confuse the positive and negative poles on the batteries. Risk of arcing and explosion.

Disconnection (A)

1 Remove the nut and remove the negative cable (-) (black).

2 Remove the nut and remove the positive cable (+) (red).

Remove the battery.

Connection (B)

Put the new battery in place.

1 Connect the positive cable (red) to the battery positive terminal and tighten the nut.

2 Connect the negative cable (black) to the battery negative terminal and tighten the nut.

NOTICE! Hand in the old battery to a waste management facility.

47709866 05-2017 © AB VOLVO PENTA

Index

A
Air Filter..... 25

B
Battery, Maintenance..... 67

C
Charge Air Pipe, Leakage Check..... 45
Checklist..... 66
Chemical products..... 16
Component location..... 22
Coolant Filter, Change..... 54
Coolant Level, Checking and Topping Up..... 51
Cooling Package, Disassembly..... 55
Cooling System..... 51

D
Drive Belt, Change..... 60

E
EGR cooler..... 46
Engine..... 21
Engine Decals..... 17
Engine oil, change..... 27
Exhaust System..... 44

F
Fuel filter, Change..... 39
Fuel Pre-filter, Change..... 34
Fuel System..... 33
Fuel system, bleeding..... 41

G
General..... 33
General advice for electronic protection..... 24
General Information..... 10
General inspection..... 21
General Tightening Torques..... 18

I
Illustrations..... 13

L
Lifting the engine – never do so alone..... 8
Long Term Storage..... 64
Lubrication System..... 27

M
Maintenance Schedule..... 21

O
Oil Analysis..... 32
Oil filter, Change..... 29

P
Proper lifting equipment..... 9

S
Safety Information..... 2
SCR System..... 47
Specifications..... 17, 19

T
Turbocharger, Inspection..... 44

V
Valves, Adjustment..... 26

W
When you work with Chemicals, Fuel and Lubrication Oil, Change..... 27

AB Volvo Penta
SE-405 08 Göteborg, Sweden
www.volvopenta.com

47709866 English 05-2017